Item	Part Code	Description
1	BOD8902-01	NYLON PROBE Φ5×700mm
2	BOD8902-02	NYLON PROBE Φ6×700mm
3	BOD8902-03	NYLON PROBE Φ8×700mm
4	BOD8902-04	NYLON PROBE Φ7×1000mm
5	BOD8902-05	COPPER PROBE Φ5×700mm
6	BOD8902-06	COPPER PROBE Φ6×700mm
7	BOD8902-07	VOLKSWAGEN PROBE
8	BOD8902-08	BMW PROBE
9	BOD8902-09	BUTTERFLY TAP (BSP1/2” M×F, DISCHARGING)
10	BOD8902-10	BUTTERFLY TAP (BSP1/4” M×F, SUCTION)
11	BOD8902-11	FILTER
12	BOD8902-12	OIL PLATE
13	BOD8902-13	CHARGING TUBE SET
14	BOD8902-14	TOOL TRAY
15	BOD8902-15	L ELBOW BSP 3/4” F×M
16	BOD8902-16	FIXING KNOB
17	BOD8902-17	CHARGING PIPE SET
18	BOD8902-18	FRONT WHEEL+SCREWS
19	BOD8902-19	LEVEL GAUGE
20	BOD8902-20	SWIVEL WHEEL+SCREWS
21	BOD8902-21	L ELBOW (LEVEL GAUGE)
22	BOD8902-22	SWIVEL WHEEL+SCREWS
23	BOD8902-23	L ELBOW BSP 1/2” M×M
24	BOD8902-24	DISCHARGING STOPPLE
25	BOD8902-25	DISCHARGING PIPE SET
26	BOD8902-26	HANDLE SET
27	BOD8902-27	SUCTION STOPPLE
28	BOD8902-28	SUCTION PIPE SET
29	BOD8903-01	VACUUM GAUGE+PROTECTION
31	BOD8903-03	VACUUM SET
32	BOD8902-32	PROBE CONTAINER
33	BOD8902-33	AIR PRESSURE GAUGE
34	BOD8902-34	AIR PRESSURE GAUGE PROTECTION
35	BOD8902-35	SAFETY VALVE
36	BOD8902-36	CROSS ELBOW BSP
37	BOD8902-37	VALVE & CONNECTOR
38	BOD8903-04	VACUUM CONNECTOR
39	BOD8903-05	MUFFLER
40	BOD8903-06	CHAMBER
41	BOD8902-40	BUTTERFLY TAP (BSP1” F×F, CHARGING)
42	BOD8903-42	ADAPTOR
43	BOD8903-43	COUPLING

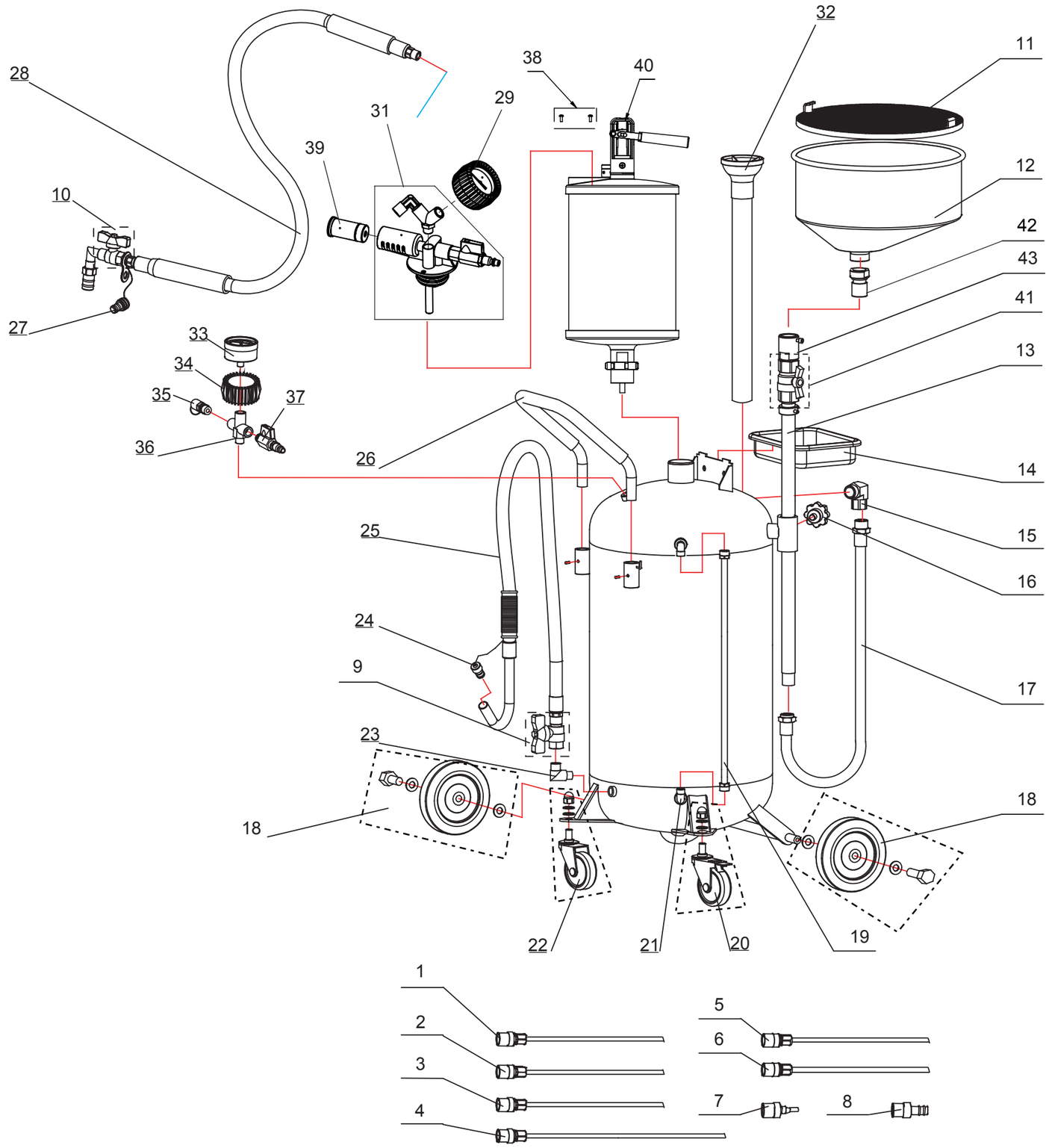

BAHCO

BOD8903A

Revision: 01

SNA Europe does not cover the causes over negligence in tool use and/or repair, inadequate care, or abnormal usage conditions.
Follow the instructions for proper use, safety, maintenance and servicing given by SNA Europe.