PART NO. 869163-A

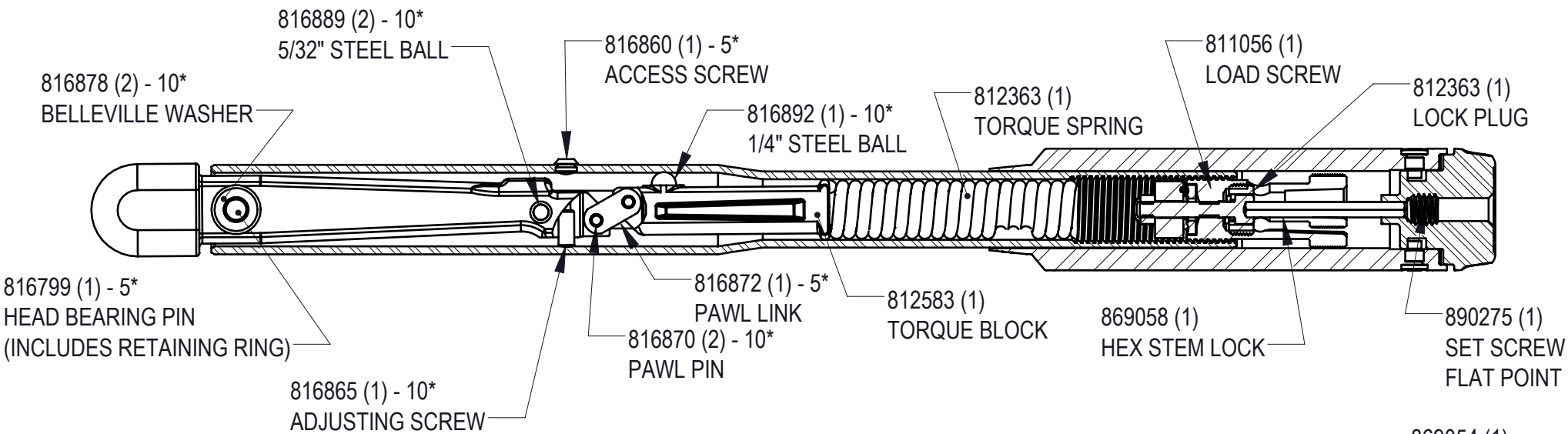

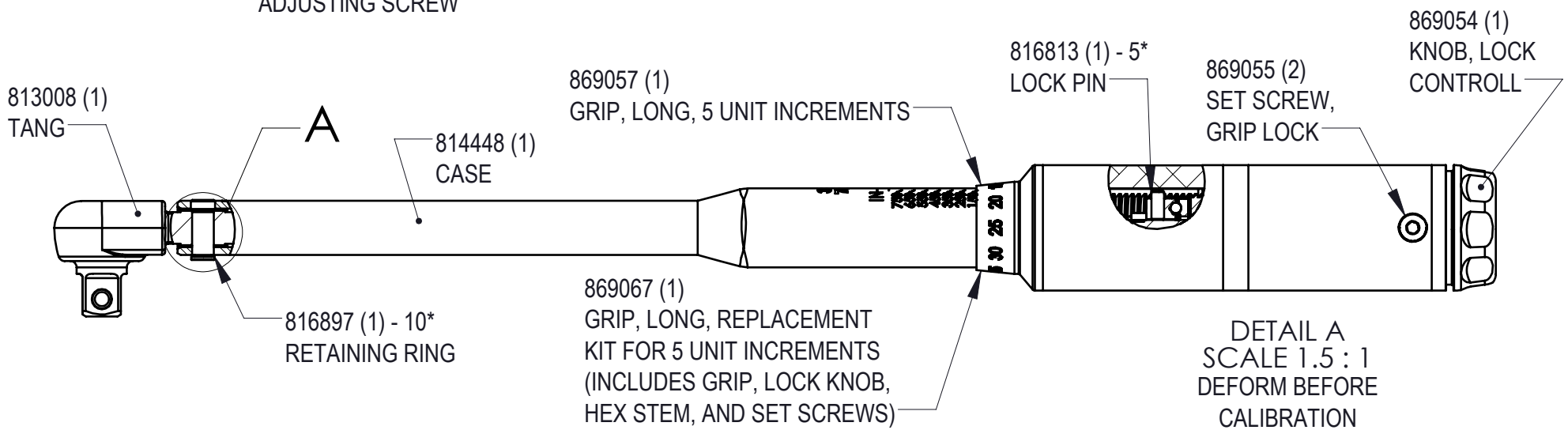

DETAIL A
SCALE 1.5 : 1
DEFORM BEFORE
CALIBRATION

816799 - THIS PIN IS FORMED OVER
CUSTOMER MUST GRIND OFF FORMED END
& INSTALL THIS PIN FORMING THE HEAD
OVER THE RETAINING RING AS SHOWN

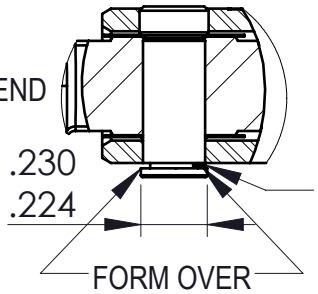

857451 - INSTRUCTIONS
857325 - CARTON
820123 - CASE PLASTIC
863052 - LABEL (AFFIXED TO RECESS, TOP OF CASE)

LEGEND: () = QUANTITY/TOOL
* = QUANTITY/MULTI-PAK

STURTEVANT RICHMONT®
TORQUE MEASUREMENT SYSTEMS
DIVISION OF RYESON CORPORATION

THIS PRINT AND ALL INFORMATION APPEARING THEREON IS THE PROPERTY OF "*STURTEVANT RICHMONT*". NEITHER THE PRINT NOR THE INFORMATION THEREON MAY BE REPRODUCED OR USED IN ANY MANNER WHATSOEVER OR DIVULGED TO ANY OTHER PERSON UNLESS SPECIFICALLY AUTHORIZED BY "*STURTEVANT RICHMONT*".

DESCRIPTION: 3SD 750I MG (IN./LBS)

DIAGRAM No: 869163-A

REV.: A