PART NO. 869160-A

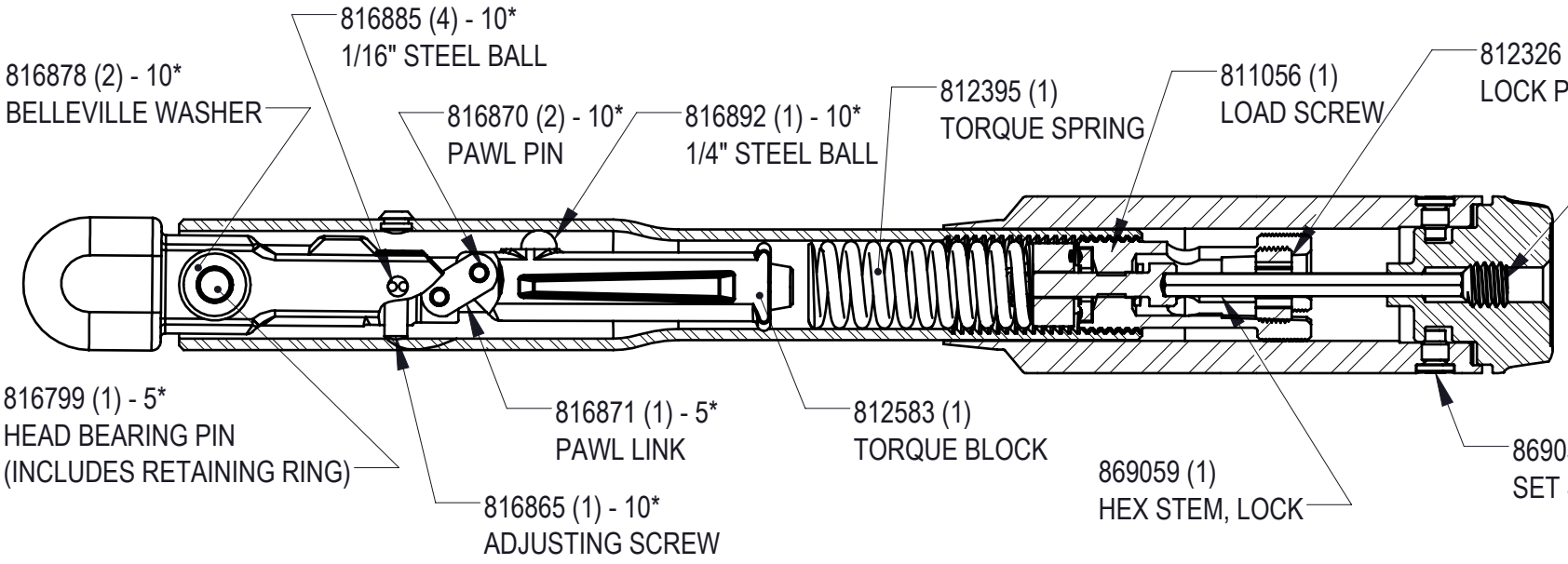

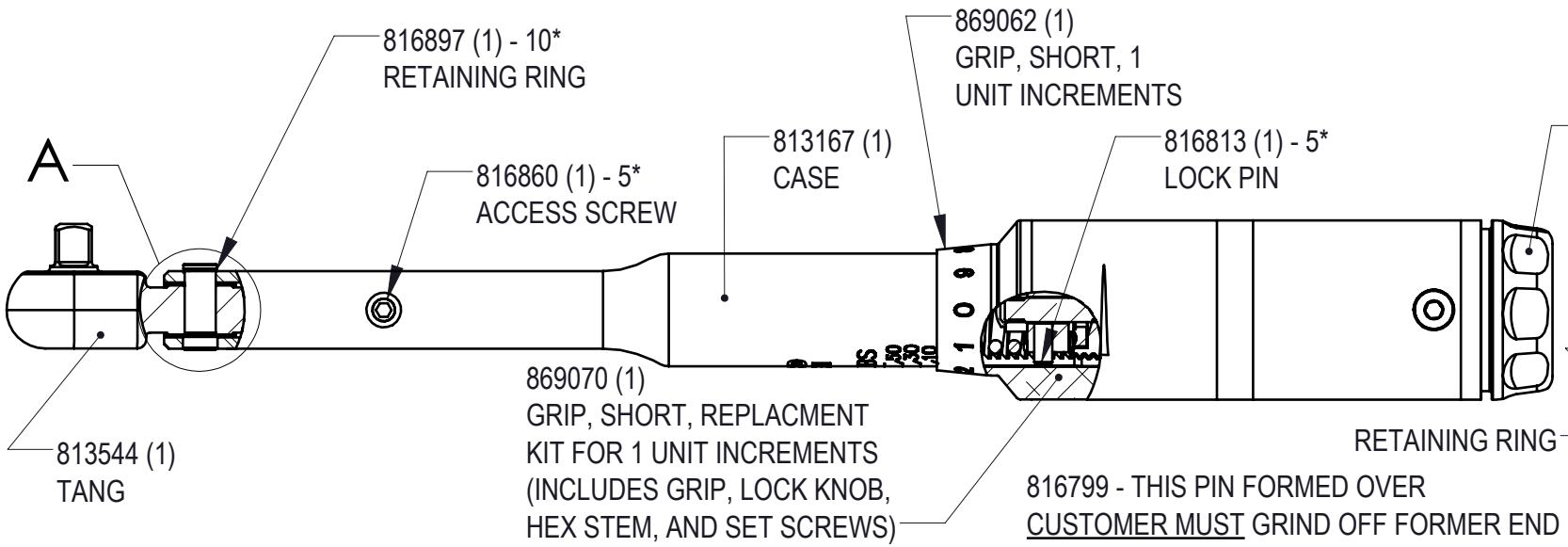

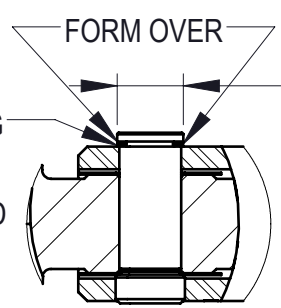

816799 - THIS PIN FORMED OVER
CUSTOMER MUST GRIND OFF FORMER END
& INSTALL THIS PIN FORMING THE HEAD
OVER THE RETAINING RING AS SHOWN

DEFORM BEFORE
CALIBRATION

DETAIL A
SCALE 1.5 : 1

857451 - INSTRUCTIONS
857324 - CARTON
820122 - CASE, PLASTIC
863052 - LABEL (AFFIXED TO RECESS, TOP OF CASE)

LEGEND: () = QUANTITY/TOOL
* = QUANTITY/MULTI-PAK

STURTEVANT RICHMONT®
TORQUE MEASUREMENT SYSTEMS
DIVISION OF RYESON CORPORATION

THIS PRINT AND ALL INFORMATION APPEARING THEREON IS THE PROPERTY OF "*STURTEVANT RICHMONT*". NEITHER THE PRINT NOR THE INFORMATION THEREON MAY BE REPRODUCED OR USED IN ANY MANNER WHATSOEVER OR DIVULGED TO ANY OTHER PERSON UNLESS SPECIFICALLY AUTHORIZED BY "*STURTEVANT RICHMONT*".

DESCRIPTION
2SD 150I MG (IN./LBS)

DIAGRAM No
869160-A

REV.
A