PART NO. 810503

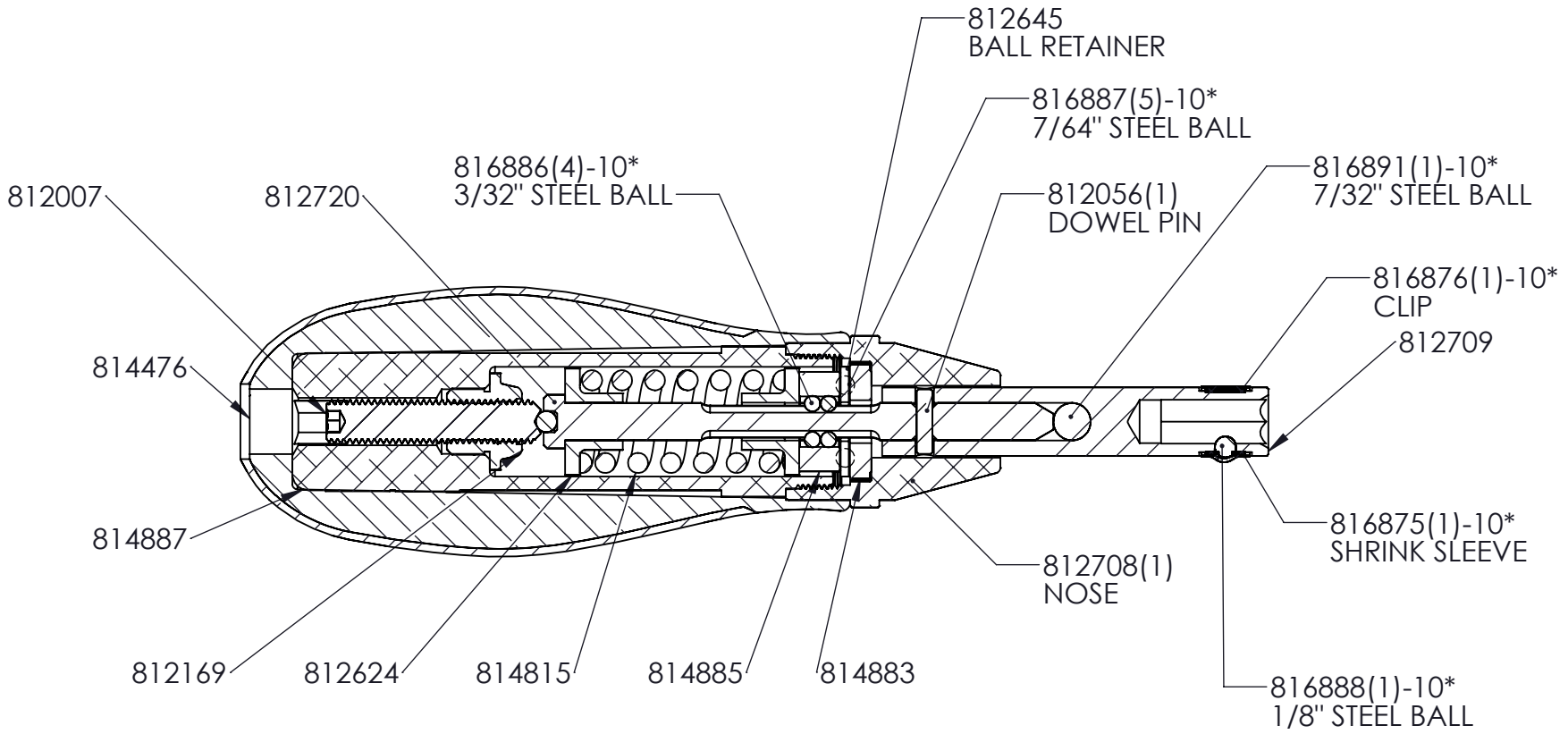


NOTES:
1. APPLY MAGNALUBE LUBRICANT TO THE KNURLED CUP POINT OF SET SCREW (812007) BEFORE ASSEMBLING.
2. CASE (814887) & NOSE (812708) MUST WITHSTAND A MINIMUM OF 60 IN'LBs OF TORQUE IN THE COUNTER-CLOCKWISE DIRECTION BEFORE COMING APART.
3. APPLY MAGNALUBE LUBRICANT TO THE GUIDE BALLS (816886), SLOTS OF SHAFT (812720) & DIMPLED INSERT (814885).
4. LIGHTLY LUBRICATE INSIDE OF SPRING (814815) WITH MAGNALUBE.

INCLUDES:
812151 - HEX KEY
857500 - CARTON
857531 - INSTRUCTIONS

LEGEND: ( ) = QUANTITY/TOOL
* = QUANTITY/MULTI-PAK

STURTEVANT RICHMONT®
TORQUE MEASUREMENT SYSTEMS
DIVISION OF RYESON CORPORATION

THIS PRINT AND ALL INFORMATION APPEARING THEREON IS THE PROPERTY OF "STURTEVANT RICHMONT". NEITHER THE PRINT NOR THE INFORMATION THEREON MAY BE REPRODUCED OR USED IN ANY MANNER WHATSOEVER OR DIVULGED TO ANY OTHER PERSON UNLESS SPECIFICALLY AUTHORIZED BY "STURTEVANT RICHMONT".

| DESCRIPTION | DIAGRAM No | REV. |
|---|---|---|
| ------ | 810503 | - |