PART NO. 10647-

| ITEM NO. | PART NUMBER | DESCRIPTION | QTY. | MULTI-PACK |
|---|---|---|---|---|
| 1 | 814381 | "CASE-HOUSING-HANDLE ASSEMBLY; EXACTA II 75" | 1 | |
| 2 | 21501 | TRANSDUCER-ASSY 75 FT.LB EXACTA II, PIN | 1 | |
| 3 | 21410 | BATTERY CAP ASSEMBLY EXACTA II | 1 | |
| 4 | 21461 | PCB-SUB ASSY, EXACTA 2, CPU, ANGLE | 1 | |
| 5 | 21609 | 1200 SERIES X-BEE RADIO - HOUSING COVER ASSEMBLY | 1 | |
| 6 | 21407 | BEZEL LCD EXACTA II | 1 | |
| 7 | 21415 | SWITCH PANEL EXACTA II | 1 | |
| 8 | 21426 | COVER FOR RS232-SWITCH; EXACTA II | 1 | |
| 9 | 30488 | #3 PLASTIC WASHER | 4 | 816162(4)-10* |
| 10 | 30489 | SCREW 2.5mm X 0.45mm X 12mm SELF TAPPING | 4 | 816161(4)-10* |
| 11 | 30496 | Alloy Steel FHSCS 6-32 x 5/16 | 2 | |
| 12 | 812122 | RING, RADIAL FITTING | 2 | 816897 (2)-10* |
| 13 | 813856 | BEARING PIN FRONT EXACTA | 2 | 816249(2)-5* |
| 14 | 842980 | BALL: 3/32" DIA. | 8 | 816886(8)-10* |
| 15 | 21427 | GASKET TAPE | 2 | |
| 16 | 30501 | Nylon Retaining Spacer 0.115 x .25 x 0.1875 | 4 | 816163(4)-10* |
| 17 | 812171 | SPRING-BELLEVILLE: CAL-36 TORQ. WR. | 2 | 86878(2)-20* |
| 18 | 21736 | FCC LABEL FOR XBEE RADIO | 1 | |
| 19 | 820199 | LABEL, EXACTA II 1200 SERIES | 1 | |

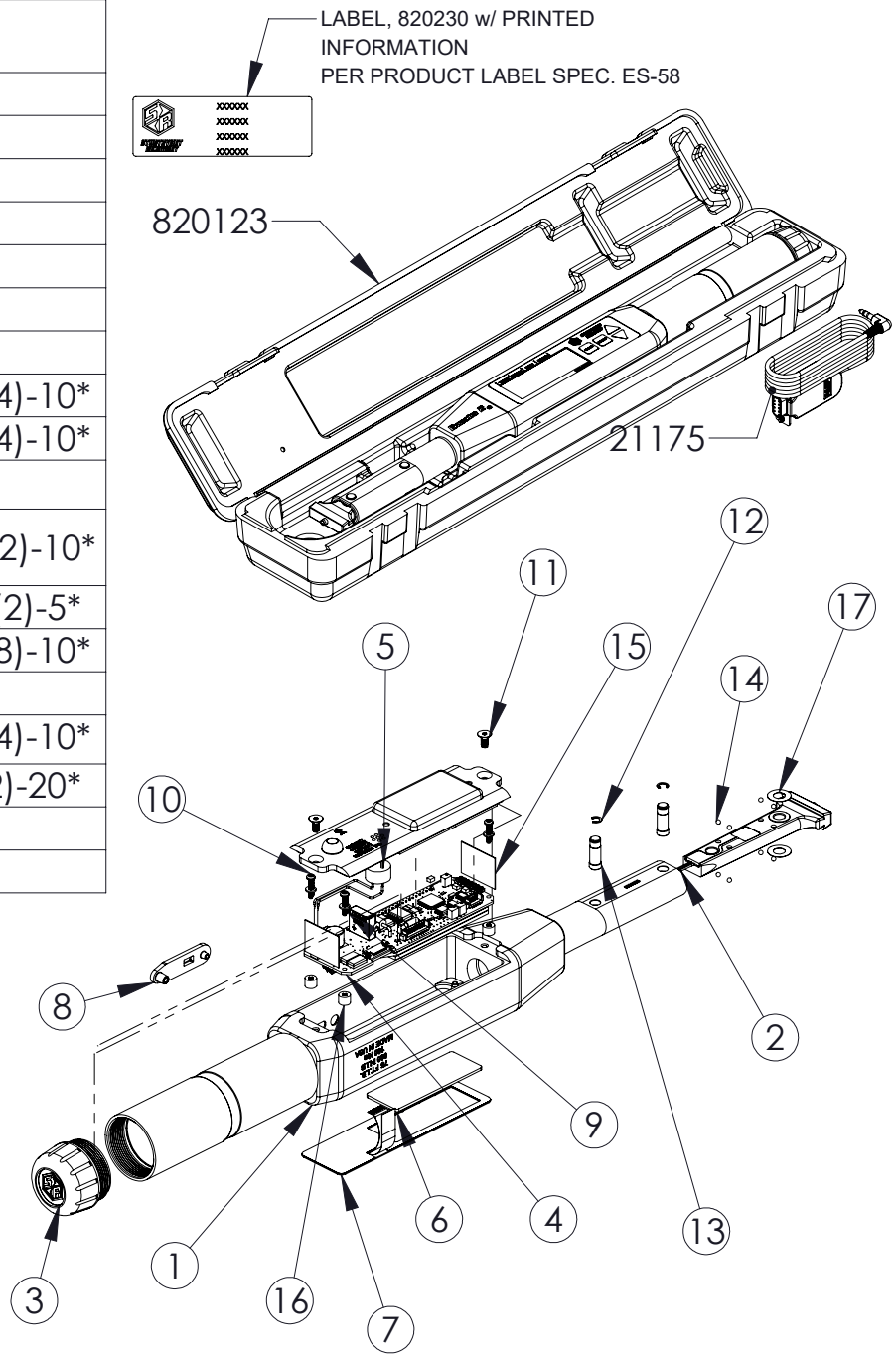


LEGEND: ( ) = QUANTITY/TOOOL
* = QUANTITY/MULTI-PAK

NOTES:
1. CUT A MINIMUM HOLE IN PARTS 21427 FOR WIRES TO COME THRU.
2. GLUE PART 21426 USING 3M SUPER STRENGTH ADHESIVE P/N 6004.




THIS PRINT AND ALL INFORMATION APPEARING THEREON IS THE PROPERTY OF "STURTEVANT RICHMONT". NEITHER THE PRINT NOR THE INFORMATION THEREON MAY BE REPRODUCED OR USED IN ANY MANNER WHATSOEVER OR DIVULGED TO ANY OTHER PERSON UNLESS SPECIFICALLY AUTHORIZED BY "STURTEVANT RICHMONT".


| DESCRIPTION | DIAGRAM No | REV. |
|---|---|---|
| ------ | 10647- | A |