PART NO. 10648-

| ITEM NO. | PART NUMBER | DESCRIPTION | QTY. | MULTIPACK |
|---|---|---|---|---|
| 1 | 814382 | "CASE-HOUSING-HANDLE ASSEMBLY; EXACTA II 150" | 1 | |
| 2 | 21461 | PCB-SUB ASSY, EXACTA 2, CPU, ANGLE | 1 | |
| 3 | 30489 | SCREW 2.5mm X 0.45mm X 12mm SELF TAPPING | 4 | 816161(4)-10* |
| 4 | 30488 | #3 PLASTIC WASHER | 4 | 816162(4)-10* |
| 5 | 21407 | BEZEL LCD EXACTA II | 1 | |
| 6 | 21609 | 1200 SERIES X-BEE RADIO - HOUSING COVER ASSEMBLY | 1 | |
| 7 | 21415 | SWITCH PANEL EXACTA II | 1 | |
| 8 | 21463 | BATTERY HOLDER EXACTA 2 ANGLE ASSEMBLY | 1 | |
| 9 | 21410 | BATTERY CAP ASSEMBLY EXACTA II | 1 | |
| 10 | 21426 | COVER FOR RS232-SWITCH; EXACTA II | 1 | |
| 11 | 30496 | Alloy Steel FHSCS 6-32 x 5/16 , 91253A145 | 2 | 816164(2)-10* |
| 12 | 21502 | TRANSDUCER-ASSY 150 FT.LB EXACTA II | 1 | |
| 13 | 813856 | BEARING PIN FRONT EXACTA | 2 | 816249(2)-5* |
| 14 | 812122 | RING, RADIAL FITTING | 2 | 816897(2)-10* |
| 15 | 21427 | GASKET TAPE | 2 | |
| 16 | 30501 | Nylon Retaining Spacer 0.115 x .25 x 0.1875 | 4 | 816163(4)-10* |
| 17 | 842980 | BALL: 3/32" DIA. | 8 | 816886(8)-10* |
| 18 | 812171 | SPRING-BELLEVILLE: CAL-36 TORQ. WR. | 2 | 816878(2)-20* |
| 19 | 21736 | FCC LABEL FOR XBEE RADIO | 1 | |
| 20 | 820199 | LABEL, EXACTA II 1200 SERIES | 1 | |

LEGEND: ( ) = QUANTITY/TOOL
* = QUANTITY/MULTIPACK

NOTES:
1. CUT A MINIMUM HOLE IN PARTS 21427 FOR WIRES TO ROUTE THROUGH.
2. GLUE PART 21426 USING 3M SUPER STRENGTH ADHESIVE PART # 6004 OR EQUIVALENT.
3. 21736 & 820199 LABELS ARE PLACED ON THE TOP SIDE OF THE TOOL.
4. SPECIFY THE TOOL MODEL AND SERIAL NUMBER WHEN ORDERING 21461 SO THE PCBA CAN BE PROGRAMMED AND SET UP ACCORDINGLY.

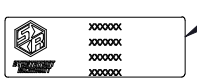


820230
LABEL W/PRINTED INFORMATION

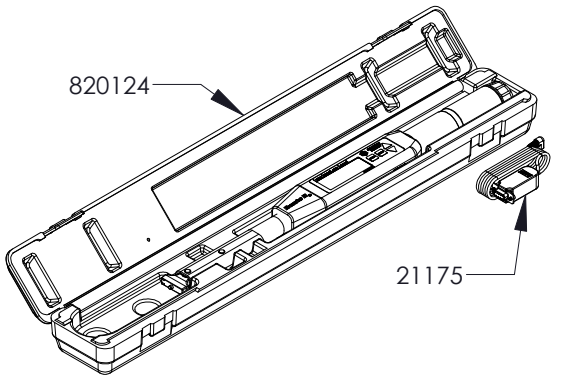


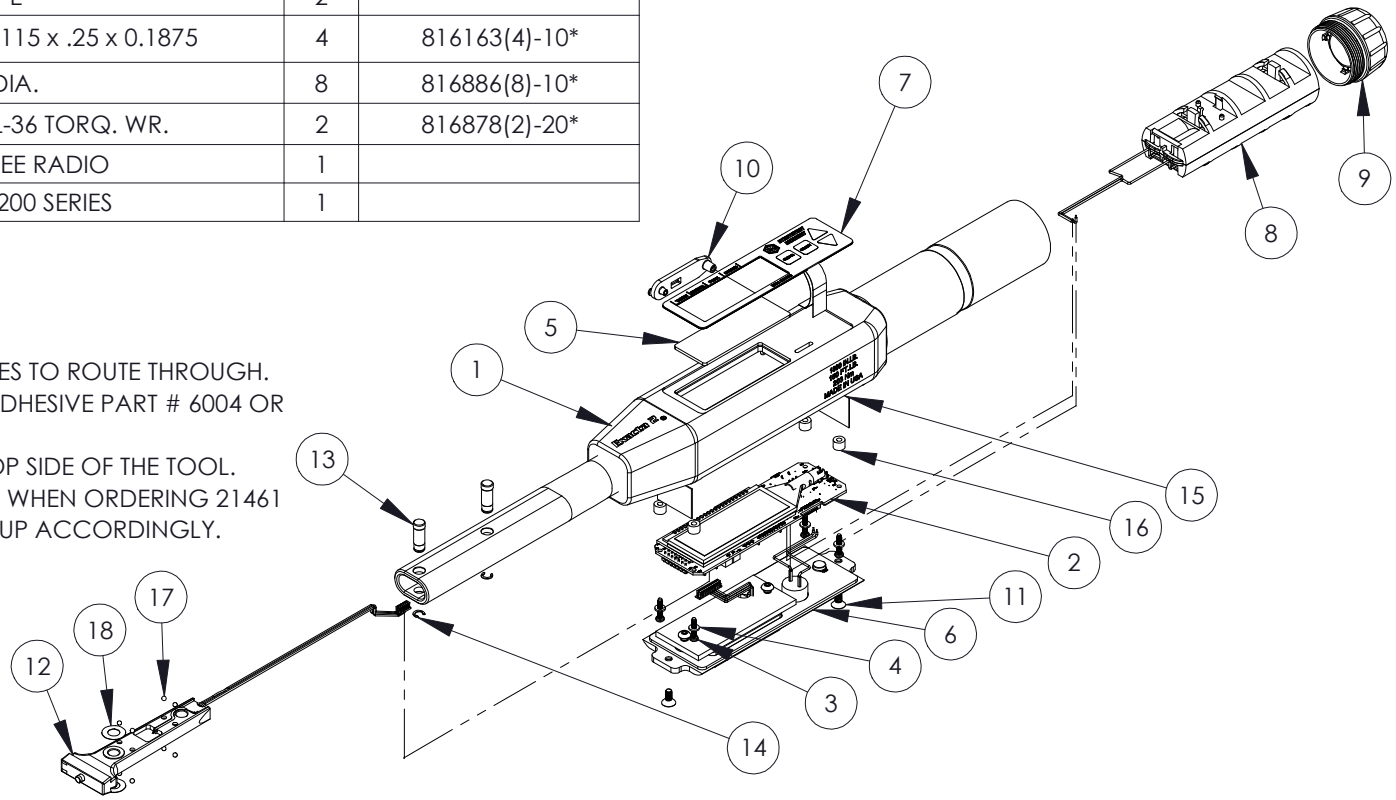





THIS PRINT AND ALL INFORMATION APPEARING THEREON IS THE PROPERTY OF "STURTEVANT RICHMONT". NEITHER THE PRINT NOR THE INFORMATION THEREON MAY BE REPRODUCED OR USED IN ANY MANNER WHATSOEVER OR DIVULGED TO ANY OTHER PERSON UNLESS SPECIFICALLY AUTHORIZED BY "STURTEVANT RICHMONT".


| DESCRIPTION | DIAGRAM No | REV. |
|---|---|---|
| EXACTA 1200-150 | 10648- | - |