ITEM NO.	PART NUMBER	DESCRIPTION	QTY.	MULTIPACK
1	814383	CASE-HOUSING-HANDLE ASSEMBLY; EXACTA II 250	1	
2	21461	PCB-SUB ASSY, EXACTA 2, CPU, ANGLE	1	
3	30488	#3 PLASTIC WASHER	4	816162(4)-10*
4	30489	SCREW 2.5mm X 0.45mm X 12mm SELF TAPPING	4	816161(4)-10*
5	30501	Nylon Retaining Spacer 0.115 x .25 x 0.1875	4	816163(4)-10*
6	21407	BEZEL LCD EXACTA II	1	
7	21463	BATTERY HOLDER EXACTA 2 ANGLE ASSEMBLY	1	
8	21410	BATTERY CAP ASSEMBLY EXACTA II	1	
9	21426	COVER FOR RS232-SWITCH; EXACTA II	1	
10	30496	Alloy Steel FHSCS 6-32 x 5/16 , 91253A145	2	
11	21503	TRANSDUCER-ASSY 250 FT.LB EXACTA II	1	
12	813856	BEARING PIN FRONT EXACTA	2	816249(2)-5*
13	812122	RING, RADIAL FITTING	2	816897(2)-10*
14	21415	SWITCH PANEL EXACTA II	1	
15	21427	GASKET TAPE	2	
16	842980	BALL: 3/32" DIA.	8	816886(8)-10*
17	812171	SPRING-BELLEVILLE: CAL-36 TORQ. WR.	2	816878(2)-20*
18	21609	1200 SERIES X-BEE RADIO - HOUSING COVER ASSEMBLY	1	
19	21736	FCC LABEL FOR XBEE RADIO	1	
20	820199	LABEL, EXACTA II 1200 SERIES	1	

LEGEND: ( ) = QUANTITY/TOOL
* = QUANTITY/MULTIPACK

NOTES:
1. CUT A MINIMUM HOLE IN PARTS 21427 FOR WIRES TO ROUTE THROUGH.
2. GLUE PART 21426 USING 3M SUPER STRENGTH ADHESIVE PART # 6004 OR EQUIVALENT.
3. 21736 & 820199 LABELS ARE PLACED ON THE TOP SIDE OF THE TOOL.
4. SPECIFY THE TOOL MODEL AND SERIAL NUMBER WHEN ORDERING 21461 SO THE PCBA CAN BE PROGRAMMED AND SET UP ACCORDINGLY.

PART NO. 10649-

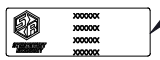

820230
LABEL W/PRINTED
INFORMATION

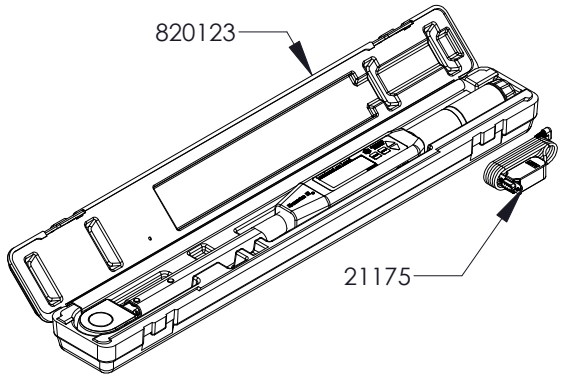

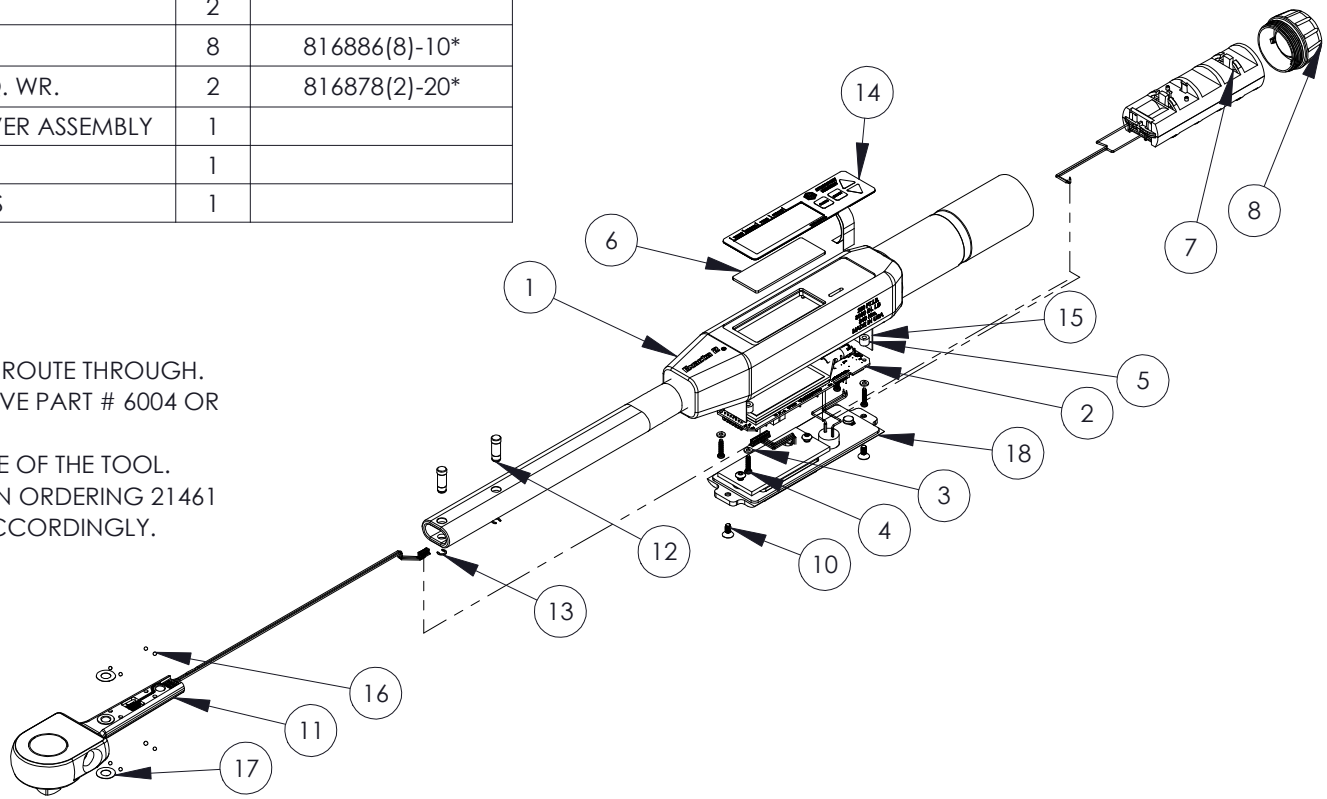

STURTEVANT RICHMONT®
TORQUE MEASUREMENT SYSTEMS
DIVISION OF RYESON CORPORATION

THIS PRINT AND ALL INFORMATION APPEARING THEREON IS THE PROPERTY OF "STURTEVANT RICHMONT". NEITHER THE PRINT NOR THE INFORMATION THEREON MAY BE REPRODUCED OR USED IN ANY MANNER WHATSOEVER OR DIVULGED TO ANY OTHER PERSON UNLESS SPECIFICALLY AUTHORIZED BY "STURTEVANT RICHMONT".

DESCRIPTION	DIAGRAM No	REV.
EXACTA 1200-250R	10649-	-