PART NO. 10650-

ITEM NO.	PART NUMBER	DESCRIPTION	QTY.	MULTIPACK
1	814385	CASE - HANDLE ASSEMBLY EXACTA II 400	1	
2	21505	TRANSDUCER-ASSY 400 FT.LB EXACTA II	1	
3	21461	PCB-SUB ASSY, EXACTA 2, CPU, ANGLE	1	
4	21463	BATTERY HOLDER EXACTA 2 ANGLE ASSEMBLY	1	
5	21410	BATTERY CAP ASSEMBLY EXACTA II	1	
6	21415	SWITCH PANEL EXACTA II	1	
7	21609	1200 SERIES X-BEE RADIO - HOUSING COVER ASSEMBLY	1	
8	30496	Alloy Steel FHSCS 6-32 x 5/16 , 91253A145	2	816164(2)-10*
9	21426	COVER FOR RS232-SWITCH; EXACTA II	1	
10	21407	BEZEL LCD EXACTA II	1	
11	30489	SCREW 2.5mm X 0.45mm X 12mm SELF TAPPING	4	816161(4)-10*
12	30488	#3 PLASTIC WASHER	4	816162(4)-10*
13	30501	Nylon Retaining Spacer 0.115 x .25 x 0.1875	4	816163(4)-10*
14	865187	HEAD BEAR. PIN, ORBITAL FORM	2	816213(2)-5*
15	861170	EXTERNAL RING FOR .352 Dia. GROOVE	2	816863(2)-10*
16	21427	GASKET TAPE	2	
17	812225	BELLEVILLE DISC SPRING	2	816878(2)-20*
18	21736	FCC LABEL FOR XBEE RADIO	1	
19	820199	LABEL, EXACTA II 1200 SERIES	1	

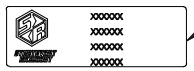

820230
LABEL W/PRINTED
INFORMATION

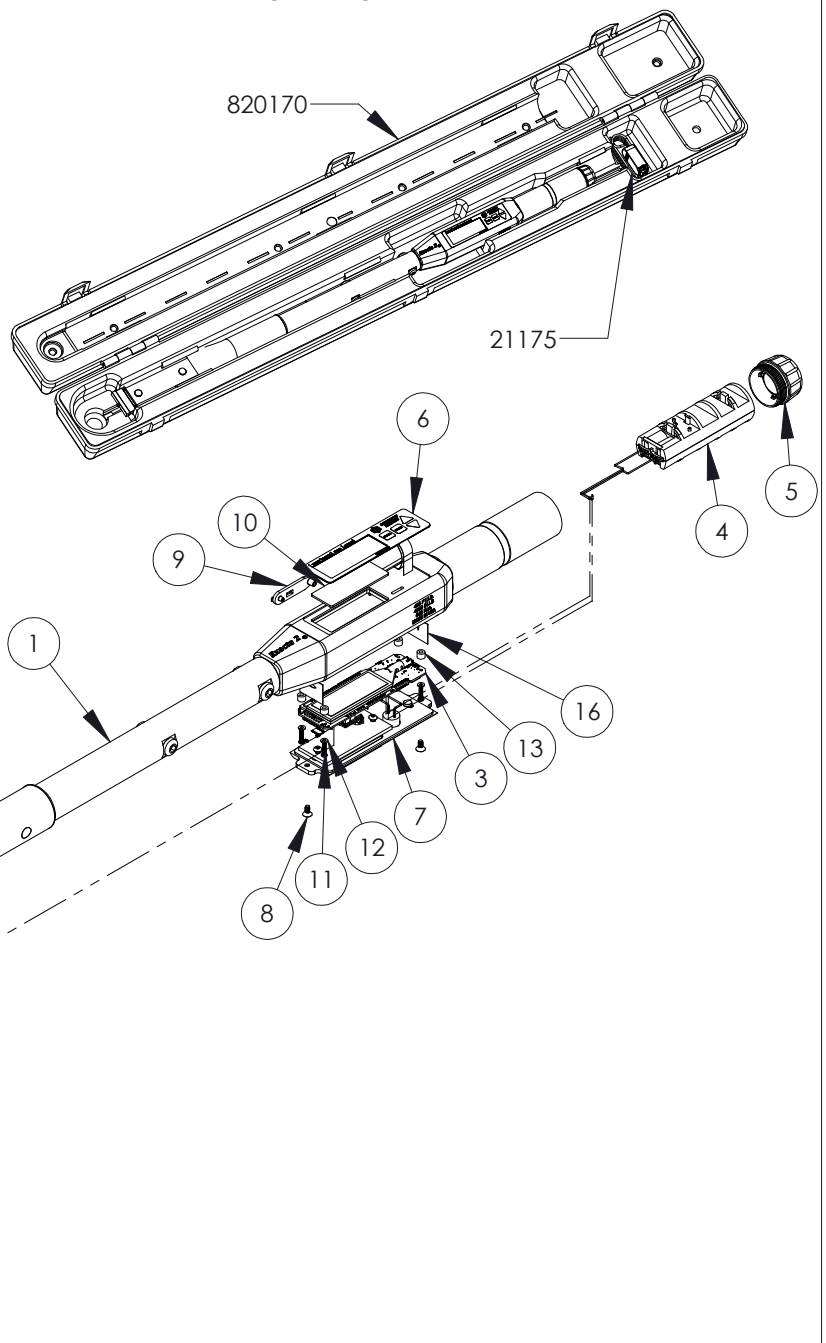

LEGEND: ( ) = QUANTITY/TOOL
* = QUANTITY/MULTIPACK

NOTES:
1. CUT A MINIMUM HOLE IN PARTS 21427 FOR WIRES TO ROUTE THROUGH.
2. GLUE PART 21426 USING 3M SUPER STRENGTH ADHESIVE PART # 6004 OR EQUIVALENT.
3. 21736 & 820199 LABELS ARE PLACED ON THE TOP SIDE OF THE TOOL.
4. SPECIFY THE TOOL MODEL AND SERIAL NUMBER WHEN ORDERING 21461 SO THE PCBA CAN BE PROGRAMMED AND SET UP ACCORDINGLY.

STURTEVANT RICHMONT®
TORQUE MEASUREMENT SYSTEMS
DIVISION OF RYESON CORPORATION

THIS PRINT AND ALL INFORMATION APPEARING THEREON IS THE PROPERTY OF "STURTEVANT RICHMONT". NEITHER THE PRINT NOR THE INFORMATION THEREON MAY BE REPRODUCED OR USED IN ANY MANNER WHATSOEVER OR DIVULGED TO ANY OTHER PERSON UNLESS SPECIFICALLY AUTHORIZED BY "STURTEVANT RICHMONT".

DESCRIPTION	DIAGRAM No	REV.
EXACTA 1200-400	10650-	-