PART NO. 10652-C

ITEM NO.	PART NUMBER	DESCRIPTION	QTY	MLTI-PAK
1	814380	CASE-HOUSING-GRIP ASSEMBLY EXACTA II 25	1	
2	21500	TRANSDUCER-ASSY 25 FT.LB EXACTA II, PIN	1	
3	21741	3.6V BATTERY PACK HOLDER ASSEMBLY	1	
4	30495	DOWEL PIN .25" X 1"LG (REMOVABLE)	2	86158(2)-5*
5	30494	SET SCREW 5/16"- 24 3A X 1/4"	2	86159(2)-10*
6	21657	EXACTA 2 - 3 CPU PCB	1	
7	21426	COVER FOR RS232-SWITCH; EXACTA II	1	
8	21658	SWITCH PANEL, EXACTA 2, 1250 SERIES	1	
9	21407	BEZEL LCD EXACTA II	1	
10	21745	3.6V BATTERY PACK CAP ASSEMBLY	1	
11	30496	Alloy Steel FHSCS 6-32 x 5/16	2	816164(2)-10*
12	21427	GASKET TAPE	2	
13	30489	SCREW 2.5mm X 0.45mm X 12mm SELF TAPPING	4	816161(4)-10*
14	30488	#3 PLASTIC WASHER	4	816162(4)-10*
15	30501	Nylon Retaining Spacer 0.115 x .25 x 0.1875	4	816163(4)-10*
16	21636	1250 SERIES X-BEE RADIO - HOUSING COVER ASSEMBLY	1	
17	21736	FCC LABEL FOR XBEE RADIO	1	
18	21685	CABLE, 1.00MM CENTER FFC JUMPER, 3" LONG	1	
19	21686	CABLE ASSY, VIBRATION MOTOR, EXACTA II 1250	1	
20	21406	LENS LED EXACTA II	1	
21	891093	O-RING 5.5mm I.D. X 1mm THICK; VITON 75	1	816165(1)-5*
22	30492	SNAP RING 1/4" X .025" THICK	1	816722(1)-10*

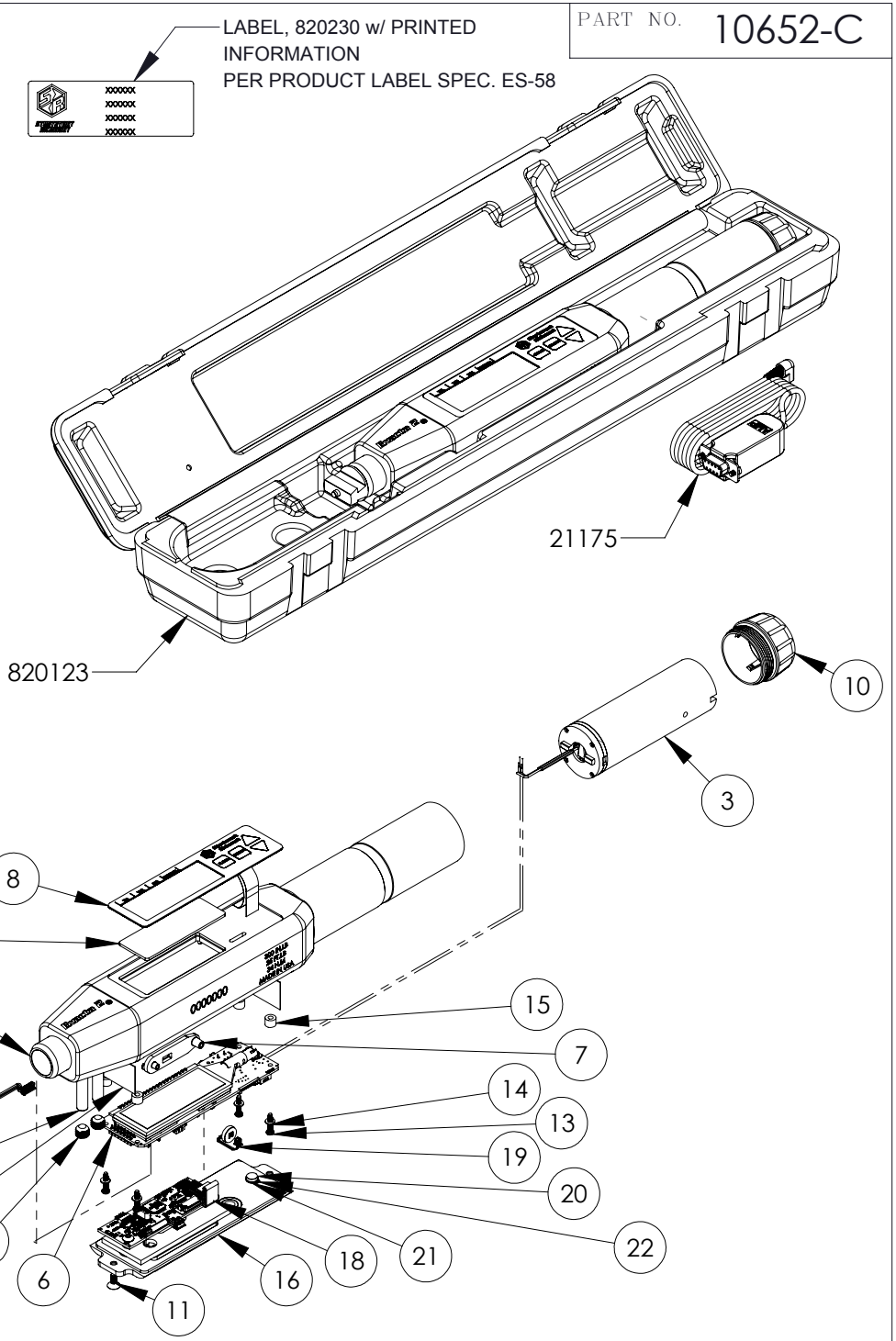

LEGEND: ( ) = QUANTITY/TOOOL
* = QUANTITY/MULTI-PAK

NOTES:

1. CUT A MINIMUM HOLE IN PARTS 21427 FOR WIRES TO COME THRU.
2. PRIOR TO INSERTING THE BATTERY PACK HOLDER ASSEMBLY (21741), APPLY A BEAD OF ADHESIVE SEALANT (MOMENTIVE RTV 103) APPROXIMATELY 1/3 OF THE WAY AROUND THE INNER CIRCUMFERENCE AND A MINIMUM OF 1/2" BELOW THE THREAD LINE OF THE HANDLE.
3. GLUE PART 21426 USING 3M SUPER STRENGTH ADHESIVE P/N 6004.
4. ATTACH VIBRATION MOTOR (21686) TO SIDE OF CASE.

NOT SHOWN:
-10674, BATTERY PACKS & CHARGER w/ CARTON 857510
-MASTER CARTON, 857121

THIS PRINT AND ALL INFORMATION APPEARING THEREON IS THE PROPERTY OF "STURTEVANT RICHMONT". NEITHER THE PRINT NOR THE INFORMATION THEREON MAY BE REPRODUCED OR USED IN ANY MANNER WHATSOEVER OR DIVULGED TO ANY OTHER PERSON UNLESS SPECIFICALLY AUTHORIZED BY "STURTEVANT RICHMONT".

DESCRIPTION	DIAGRAM No	REV.
EXACTA II 1250 SERIES 25	10652-C	C