PART NO. 10656-B

NOTES:

1. CUT A MINIMUM HOLE IN 21427 GASKET TAPE FOR WIRES TO COME THRU.
2. PRIOR TO INSERTING THE BATTERY PACK HOLDER ASSEMBLY (21741), APPLY A BEAD OF ADHESIVE SEALANT (MOMENTIVE RTV 103) APPROXIMATELY 1/3 OF THE WAY AROUND THE INNER CIRCUMFERENCE AND A MINIMUM OF 1/2" BELOW THE THREAD LINE OF THE HANDLE.
3. GLUE PART 21426 USING 3M SUPER STRENGTH ADHESIVE P/N 6004.
4. ATTACH VIBRATION MOTOR (21686) TO SIDE OF CASE.

PARTS INCLUDED:
PLASTIC CASE: 820170
CABLE: 21175

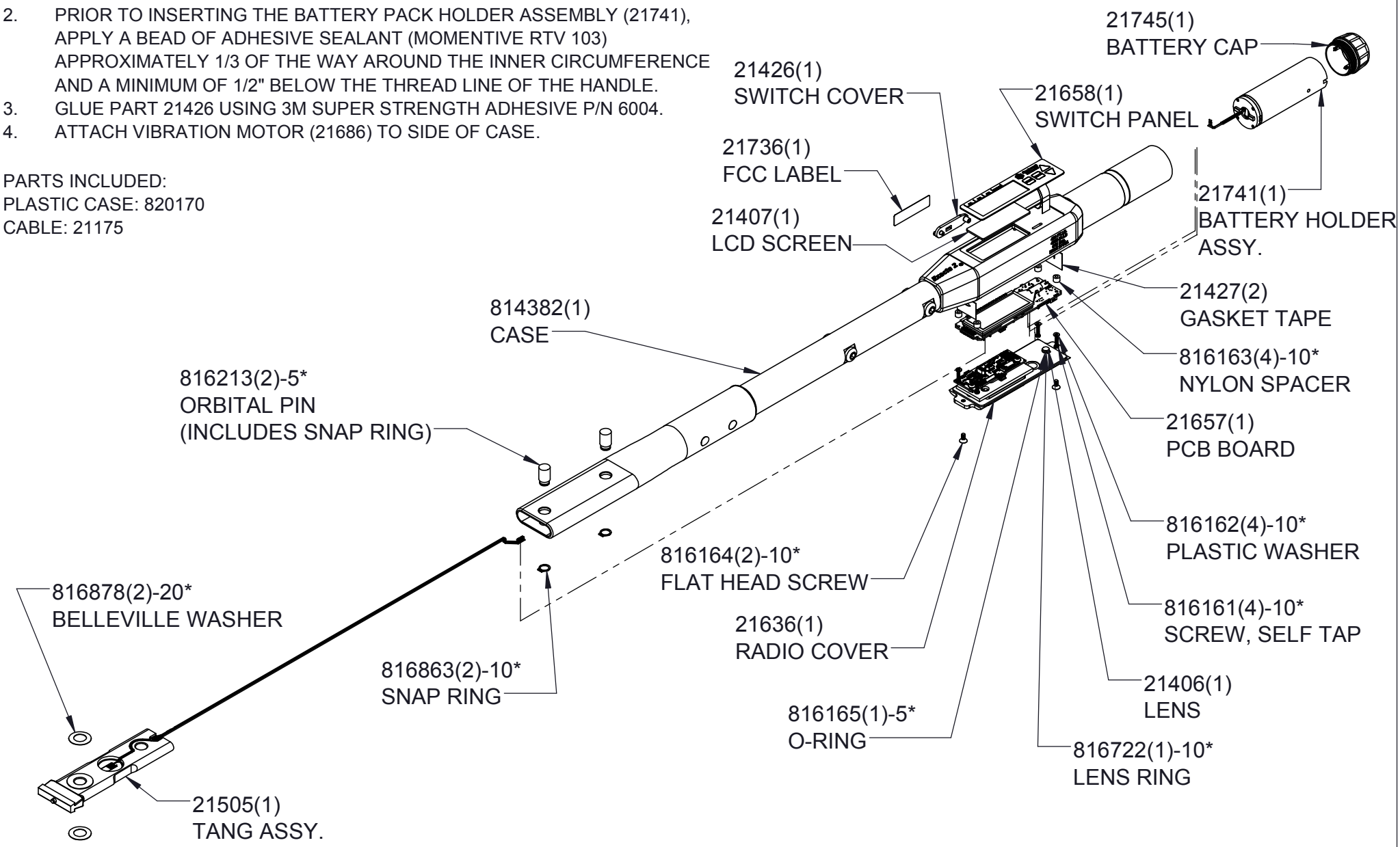

LEGEND: ( ) = QUANTITY/TOOL
* = QUANTITY/MULTI-PAK

THIS PRINT AND ALL INFORMATION APPEARING THEREON IS THE PROPERTY OF "STURTEVANT RICHMONT". NEITHER THE PRINT NOR THE INFORMATION THEREON MAY BE REPRODUCED OR USED IN ANY MANNER WHATSOEVER OR DIVULGED TO ANY OTHER PERSON UNLESS SPECIFICALLY AUTHORIZED BY "STURTEVANT RICHMONT".

DESCRIPTION	DIAGRAM No	REV.
EXACTA II 1250 400 FTLB	10656-B	B