PART NO. 10786

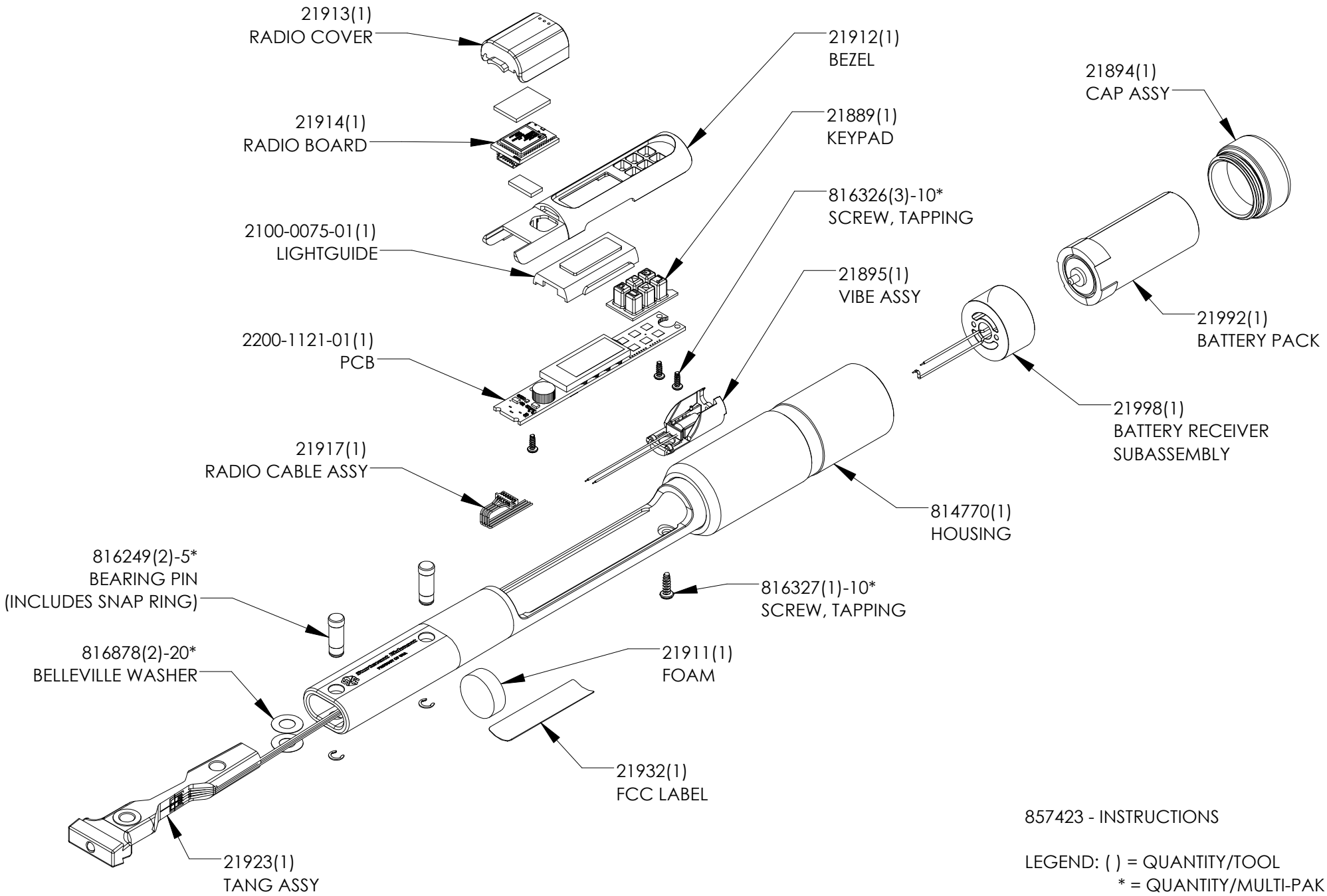

857423 - INSTRUCTIONS

LEGEND: ( ) = QUANTITY/TOOL
* = QUANTITY/MULTI-PAK

STURTEVANT RICHMONT®
TORQUE MEASUREMENT SYSTEMS
DIVISION OF RYESON CORPORATION

THIS PRINT AND ALL INFORMATION APPEARING THEREON IS THE PROPERTY OF "*STURTEVANT RICHMONT*". NEITHER THE PRINT NOR THE INFORMATION THEREON MAY BE REPRODUCED OR USED IN ANY MANNER WHATSOEVER OR DIVULGED TO ANY OTHER PERSON UNLESS SPECIFICALLY AUTHORIZED BY "*STURTEVANT RICHMONT*".

DESCRIPTION	DIAGRAM No	REV.
EXACTA 1350-5 QC	10786	–