PART NO. 874013

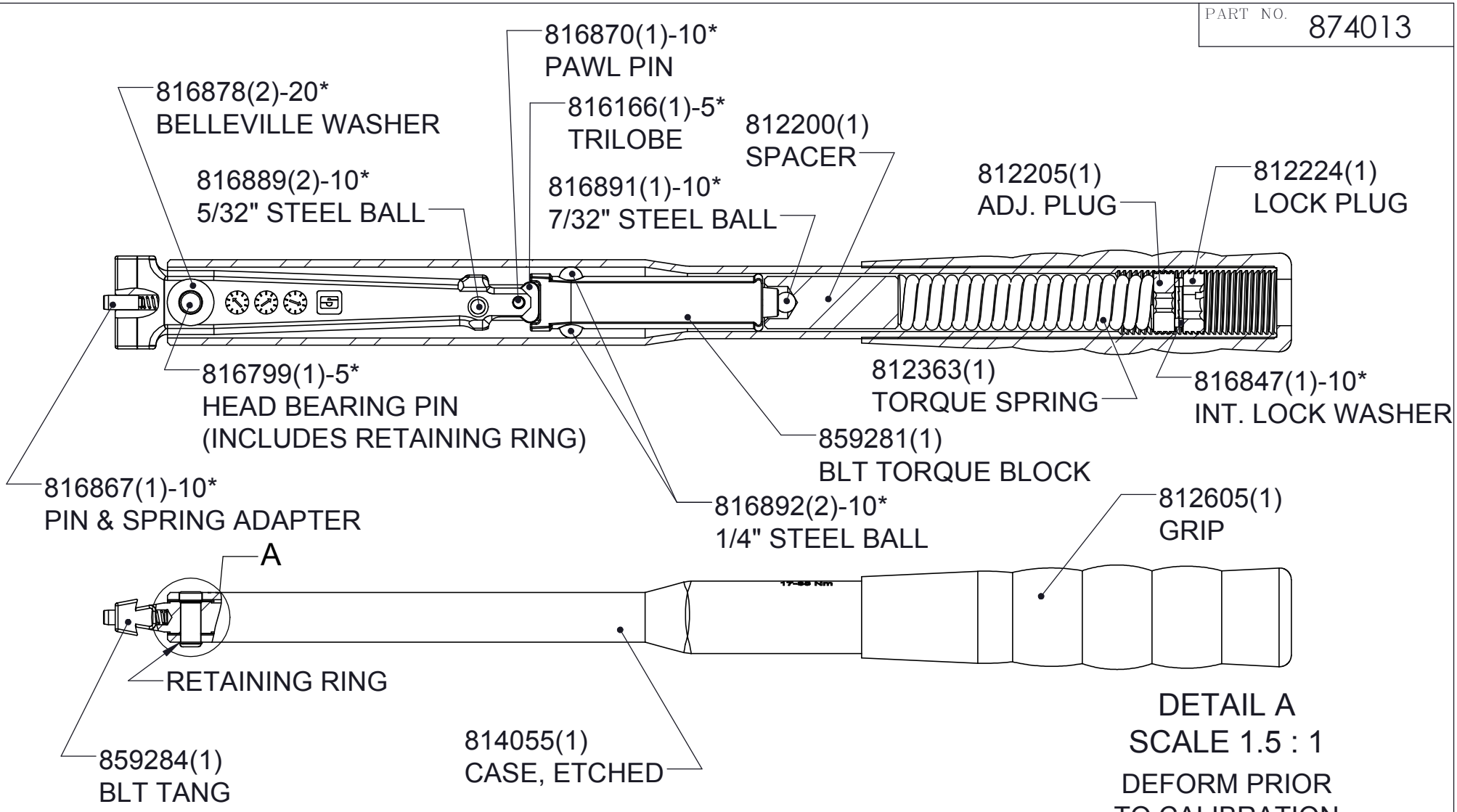

DETAIL A
SCALE 1.5 : 1

DEFORM PRIOR
TO CALIBRATION

857270- INSTRUCTIONS
811251- TANG ASS'Y. (INCLUDES TANG & PIN & SPRING ADAPTER)

816799- THIS PIN IS FORMED OVER. **CUSTOMER MUST** GRIND OFF FORMED END & INSTALL THIS PIN FORMING THE HEAD OVER THE RETAINING RING AS SHOWN.

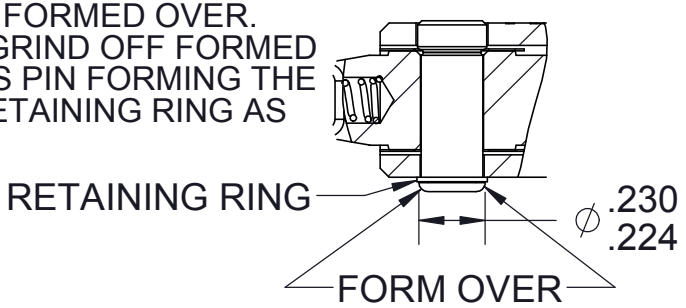

LEGEND:
( ) = QUANTITY/TOOL
* = QUANTITY/MULTI-PAK

STURTEVANT RICHMONT®
TORQUE MEASUREMENT SYSTEMS
DIVISION OF RYESON CORPORATION

THIS PRINT AND ALL INFORMATION APPEARING THEREON IS THE PROPERTY OF "STURTEVANT RICHMONT". NEITHER THE PRINT NOR THE INFORMATION THEREON MAY BE REPRODUCED OR USED IN ANY MANNER WHATSOEVER OR DIVULGED TO ANY OTHER PERSON UNLESS SPECIFICALLY AUTHORIZED BY "STURTEVANT RICHMONT".

DESCRIPTION	DIAGRAM No	REV.
BLT-750I	874013	F