PART NO. 874054

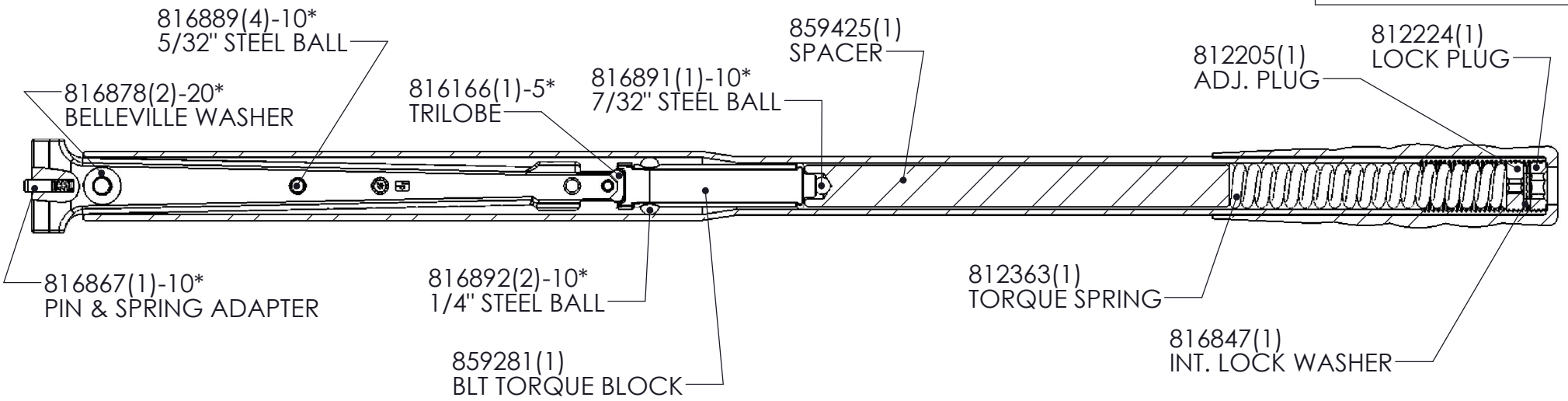

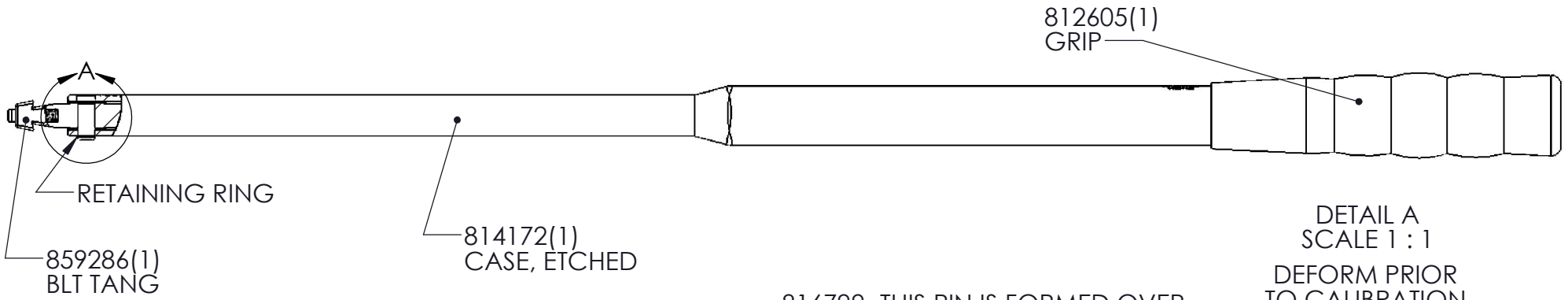

DETAIL A
SCALE 1 : 1

DEFORM PRIOR
TO CALIBRATION

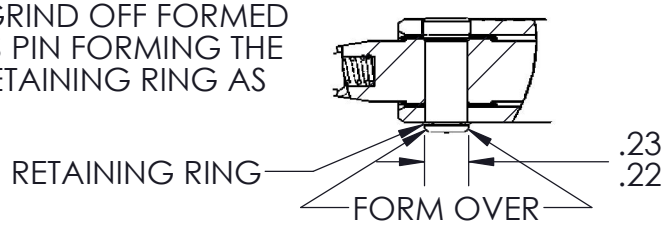

816799- THIS PIN IS FORMED OVER. **CUSTOMER MUST** GRIND OFF FORMED END & INSTALL THIS PIN FORMING THE HEAD OVER THE RETAINING RING AS SHOWN.

857270- INSTRUCTIONS
811252- TANG ASS'Y. (INCLUDES TANG & PIN & SPRING ADAPTER)

LEGEND:
( ) = QUANTITY/TOOL
* = QUANTITY/MULTI-PAK

THIS PRINT AND ALL INFORMATION APPEARING THEREON IS THE PROPERTY OF "STURTEVANT RICHMONT". NEITHER THE PRINT NOR THE INFORMATION THEREON MAY BE REPRODUCED OR USED IN ANY MANNER WHATSOEVER OR DIVULGED TO ANY OTHER PERSON UNLESS SPECIFICALLY AUTHORIZED BY "STURTEVANT RICHMONT".

DESCRIPTION	DIAGRAM No	REV.
BLT-1800I-ERGO	874054	E