PART NO. 874334

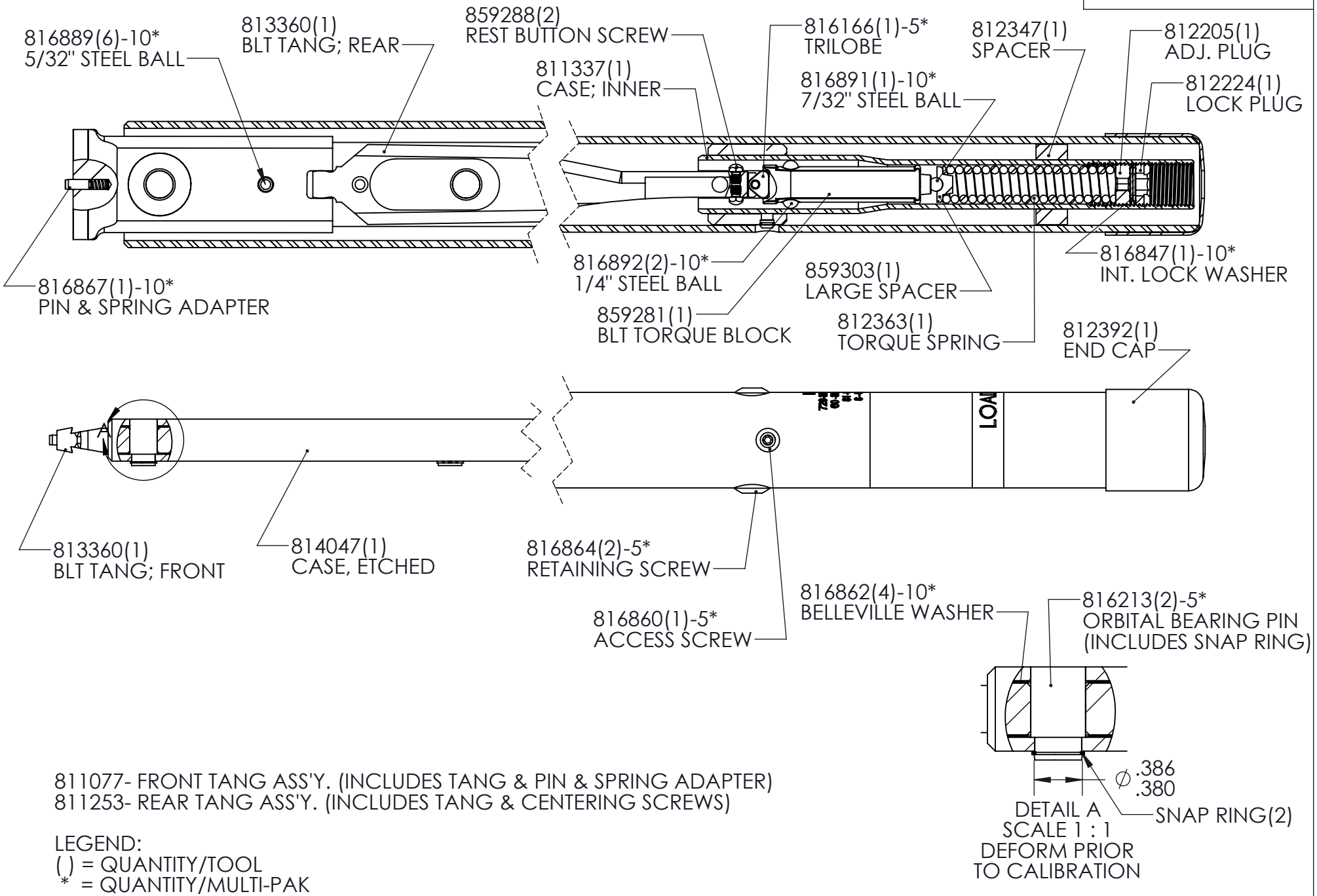

811077- FRONT TANG ASS'Y. (INCLUDES TANG & PIN & SPRING ADAPTER)
811253- REAR TANG ASS'Y. (INCLUDES TANG & CENTERING SCREWS)

LEGEND:
( ) = QUANTITY/TOOL
* = QUANTITY/MULTI-PAK

THIS PRINT AND ALL INFORMATION APPEARING THEREON IS THE PROPERTY OF "STURTEVANT RICHMONT". NEITHER THE PRINT NOR THE INFORMATION THEREON MAY BE REPRODUCED OR USED IN ANY MANNER WHATSOEVER OR DIVULGED TO ANY OTHER PERSON UNLESS SPECIFICALLY AUTHORIZED BY "STURTEVANT RICHMONT".

DESCRIPTION	DIAGRAM No	REV.
BLT-3600I	874334	C