PART NO. 874014

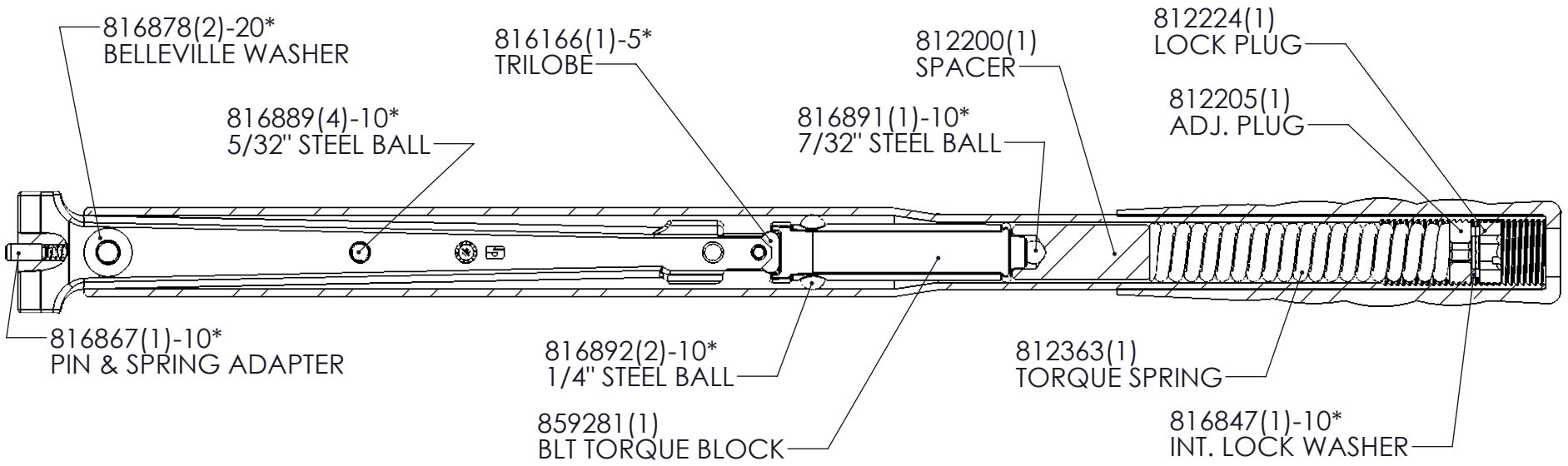

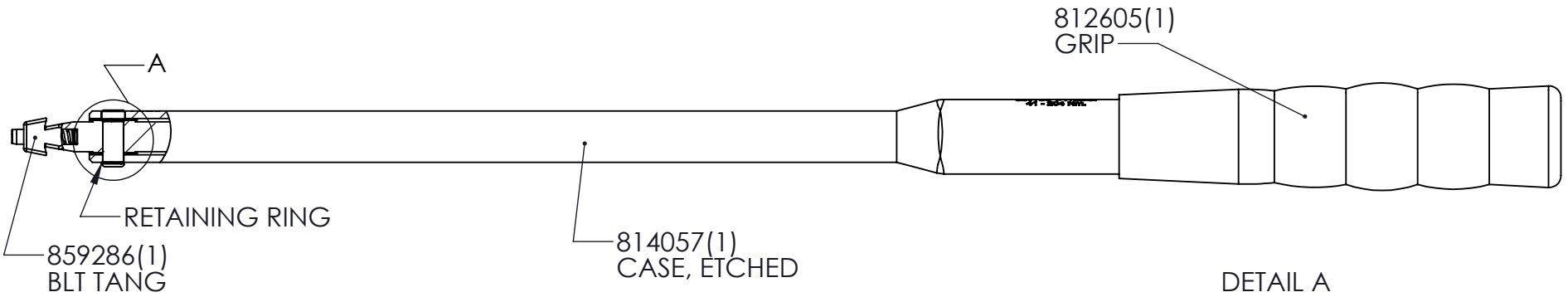

857270- INSTRUCTIONS
811252- TANG ASS'Y. (INCLUDES TANG & PIN & SPRING ADAPTER)

LEGEND:
( ) = QUANTITY/TOOL
* = QUANTITY/MULTI-PAK

816799- THIS PIN IS FORMED OVER. **CUSTOMER MUST** GRIND OFF FORMED END & INSTALL THIS PIN FORMING THE HEAD OVER THE RETAINING RING AS SHOWN.

DETAIL A
SCALE 1.5 : 1
DEFORM PRIOR TO CALIBRATION

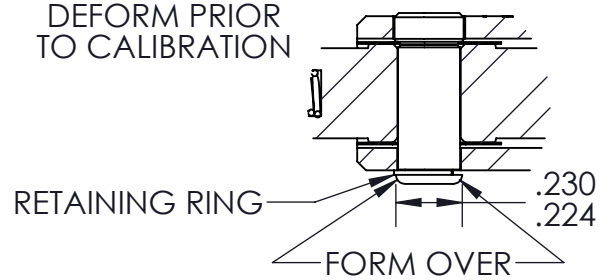

STURTEVANT RICHMONT®
TORQUE MEASUREMENT SYSTEMS
DIVISION OF RYESON CORPORATION

THIS PRINT AND ALL INFORMATION APPEARING THEREON IS THE PROPERTY OF "STURTEVANT RICHMONT". NEITHER THE PRINT NOR THE INFORMATION THEREON MAY BE REPRODUCED OR USED IN ANY MANNER WHATSOEVER OR DIVULGED TO ANY OTHER PERSON UNLESS SPECIFICALLY AUTHORIZED BY "STURTEVANT RICHMONT".

DESCRIPTION	DIAGRAM No	REV.
BLT-1800I	874014	D