PART NO. 869792

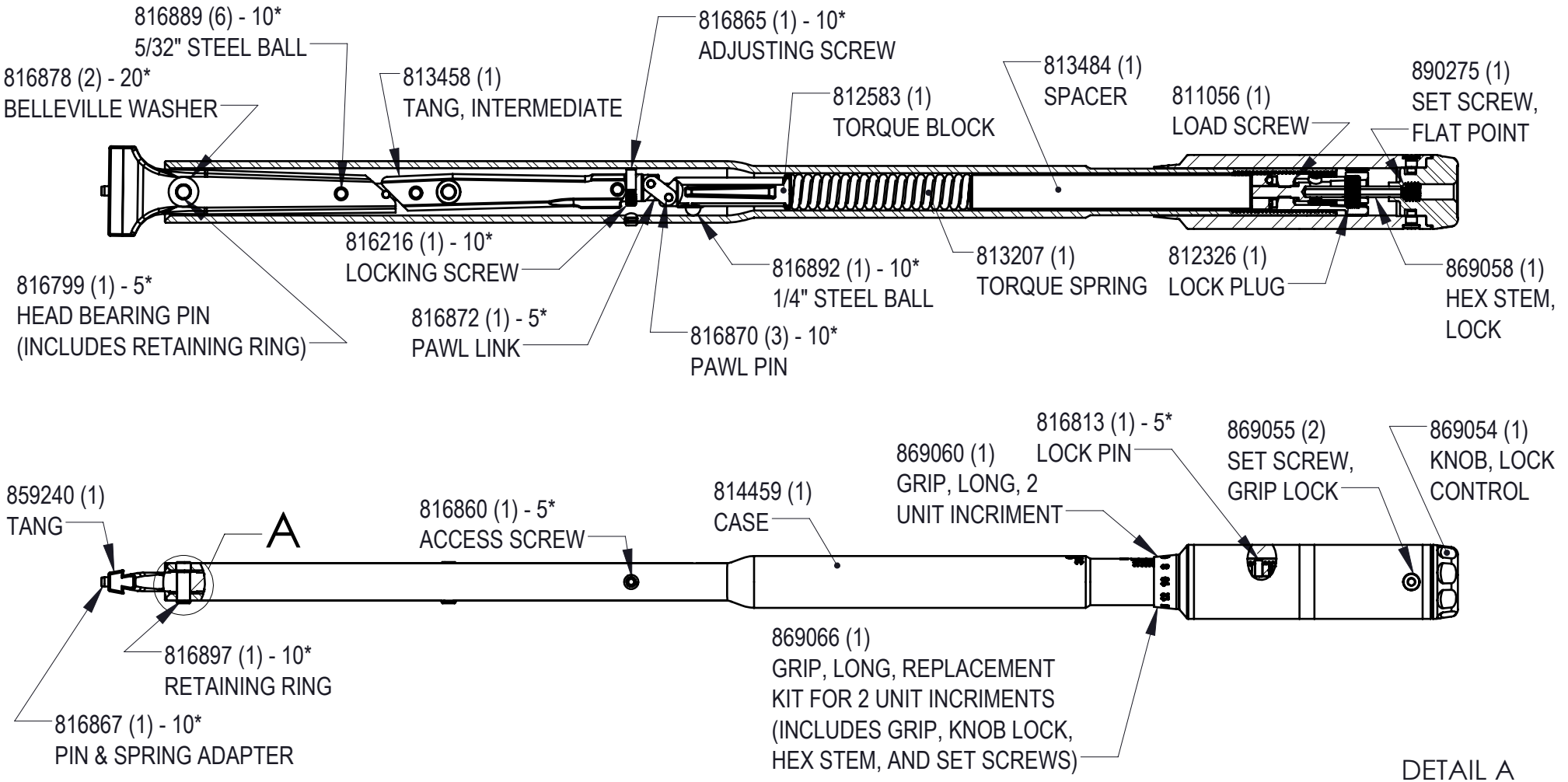

DETAIL A
SCALE 4 : 5
DEFORM BEFORE
CALIBRATION

816799 - THIS PIN IS FORMED OVER
CUSTOMER MUST GRIND OFF FORMED END
& INSTALL THIS PIN FORMING THE HEAD
OVER THE REATINING RING AS SHOWN.

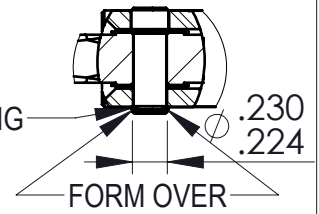

857451 - INSTRUCTIONS
857501 - CARTON

LEGEND: () = QUANTITY/TOOL
* = QUANTITY/MULTI-PAK

STURTEVANT RICHMONT®
TORQUE MEASUREMENT SYSTEMS
DIVISION OF RYESON CORPORATION

THIS PRINT AND ALL INFORMATION APPEARING THEREON IS THE PROPERTY OF "STURTEVANT RICHMONT". NEITHER THE PRINT NOR THE INFORMATION THEREON MAY BE REPRODUCED OR USED IN ANY MANNER WHATSOEVER OR DIVULGED TO ANY OTHER PERSON UNLESS SPECIFICALLY AUTHORIZED BY "STURTEVANT RICHMONT".

DESCRIPTION	DIAGRAM No	REV.
CCM 300NM MG	869792	C