PART NO. 869782

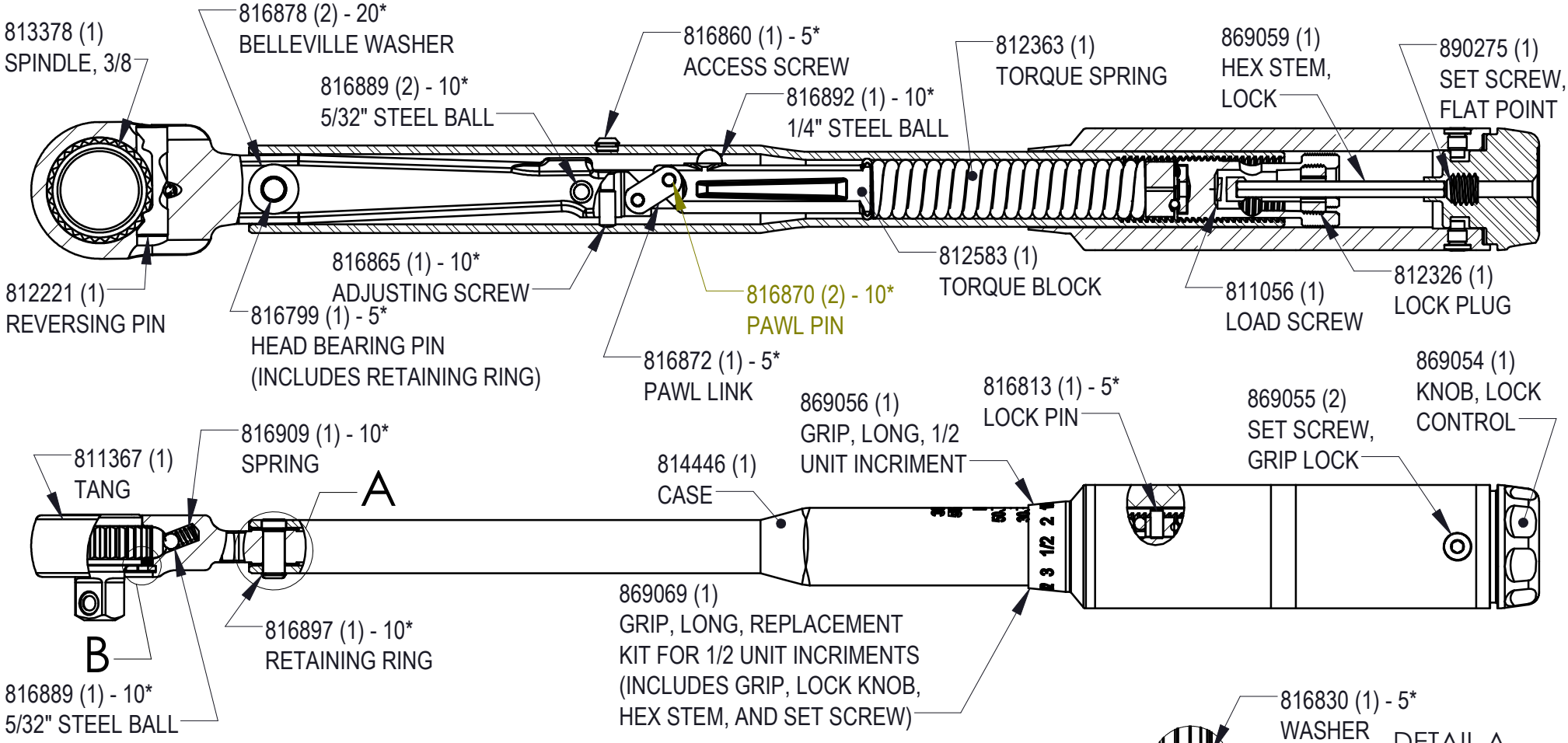

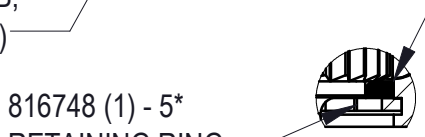

DETAIL B
SCALE 2 : 1.5

DETAIL A
SCALE 1.5 : 1

DEFORM BEFORE
CALIBRATION

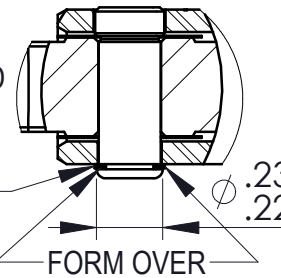

857451 - INSTRUCTIONS
820231 - LABEL w/DATE STAMP (CALIBRATION)
820123 - CASE, PLASTIC
820230 - LABEL (AFFIXED TO RECESS, TOP OF CASE)
816958 - RATCHET RENEWAL KIT (INCLUDES SPINDLE, REVERSING PIN, WASHER, RETAINING RING, SPRING, AND BALL)
811367 - RATCHET TANG ASSEMBLY (INCLUDES RATCHET RENEWAL KIT, AND TANG)

LEGEND: () = QUANTITY/TOOL
* = QUANTITY/MULTI-PAK

816799 - THIS PIN IS FORMED OVER **CUSTOMER MUST** GRIND OFF FORMED END & INSTALL THIS PIN FORMING THE HEAD OVER THE RETAINING RING AS SHOWN.

STURTEVANT RICHMONT®
TORQUE MEASUREMENT SYSTEMS
DIVISION OF RYESON CORPORATION

THIS PRINT AND ALL INFORMATION APPEARING THEREON IS THE PROPERTY OF "STURTEVANT RICHMONT". NEITHER THE PRINT NOR THE INFORMATION THEREON MAY BE REPRODUCED OR USED IN ANY MANNER WHATSOEVER OR DIVULGED TO ANY OTHER PERSON UNLESS SPECIFICALLY AUTHORIZED BY "STURTEVANT RICHMONT".

DESCRIPTION	DIAGRAM No	REV.
3SDR 50NM MG	869782	B