DRAWING #	"A"	"B"	"C"	"D"	"E"	"F"	"G"
855292	8	1 1/2	30	34 1/4	5 5/32	4 11/64	27/32

PLEASE NOTE – IF CUSTOMER REPLACES PARTS THEY ARE RESPONSIBLE AS STATED BELOW:

1. REMOVAL OF SCALE VOIDS ACCURACY & WARRANTY OF WRENCH.
2. REPLACING MEMORY FINGERS OR GUIDE – CARE MUST BE TAKEN NOT TO DAMAGE OR SCRATCH SCALE.
3. REPLACING HANDLE OR ITS COMPONENTS – HANDLE MUST PIVOT FREELY WHEN IN OPERATION OR WRENCH WILL BE INACCURATE & VOID WARRANTY.

			MULTI PAK		
ITEM	QTY	PART NO.	PART NO.	QTY	DESCRIPTION
2	1	859138			HANDLE S300
3	4	861582	816838	15	RIVET RD HEAD ALUM
4	1	861115/mark as 855292			NPS300
6	1	861015			HANDLE PIVOT PIN S300
7	2	861123	816839	15	RIVET RD HEAD ALUM
8	1	859190		1	GUIDE M300
9	1	861148		1	MEMORY FINGERS R/L M30
10	1	856071		1	HAMMER ASY F300
11	1	861143		1	RIVET RD HEAD SOFT IRON
12	1	861145		1	HANDLE STOP S300

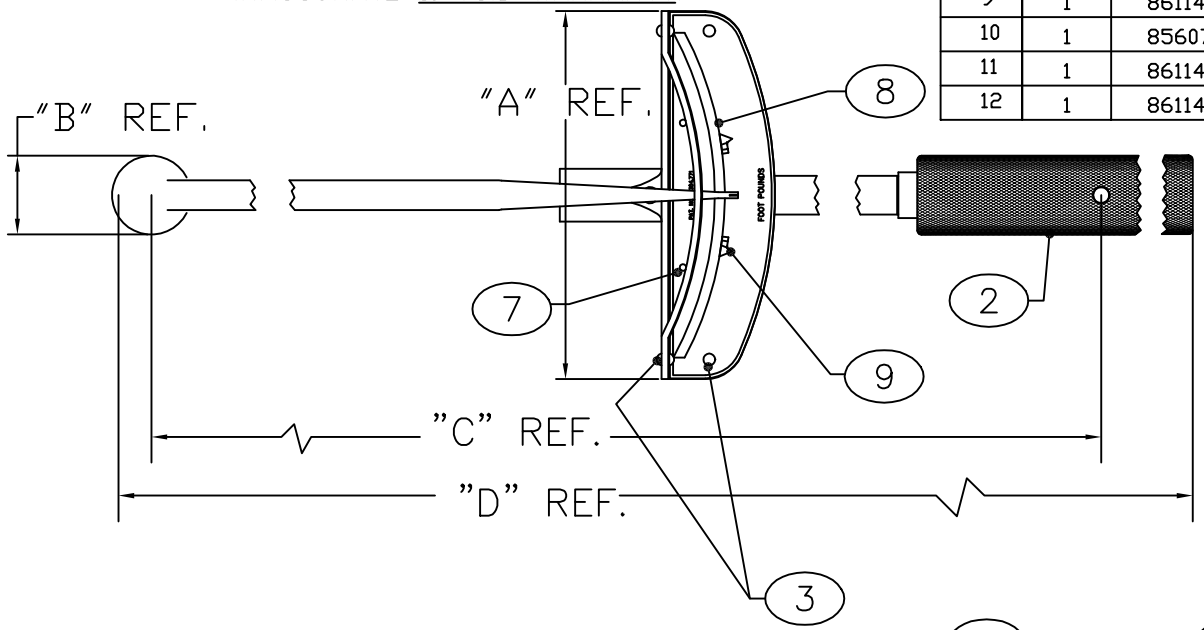

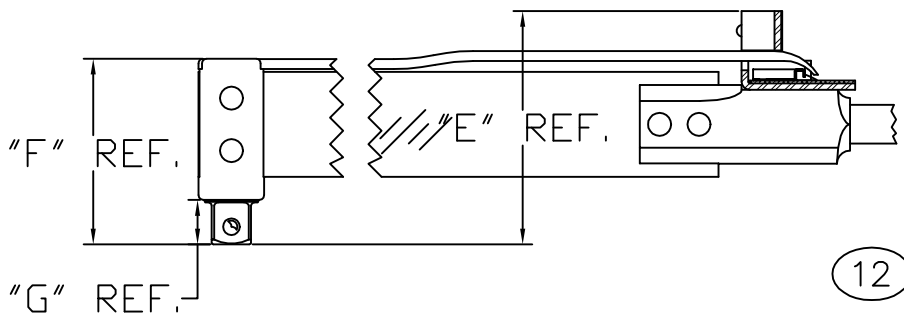

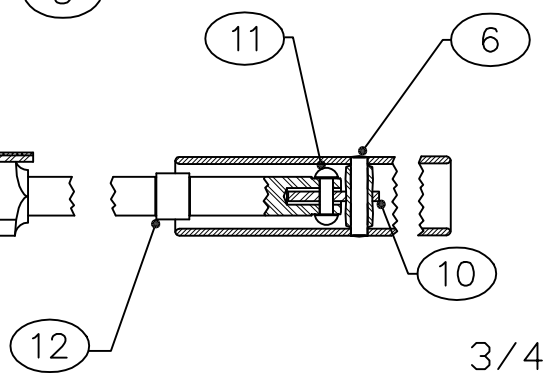

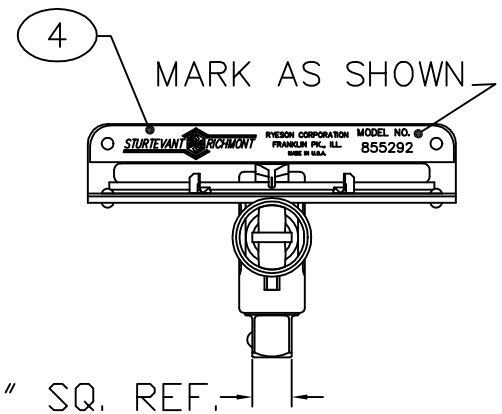

STURTEVANT RICHMONT®
TORQUE MEASUREMENT SYSTEMS
DIVISION OF RYESON CORPORATION

THIS PRINT AND ALL INFORMATION APPEARING THEREON IS THE PROPERTY OF "STURTEVANT/RICHMONT". NEITHER THE PRINT NOR THE INFORMATION THEREON MAY BE REPRODUCED OR USED IN ANY MANNER WHATSOEVER OR DIVULGED TO ANY OTHER PERSON UNLESS SPECIFICALLY AUTHORIZED BY "STURTEVANT/RICHMONT".

PART DESCRIPTION

M410Nm, 3/4 DR. SQ.

DIAGRAM NO. & REV.

855292–C