PART NO. 819695-G

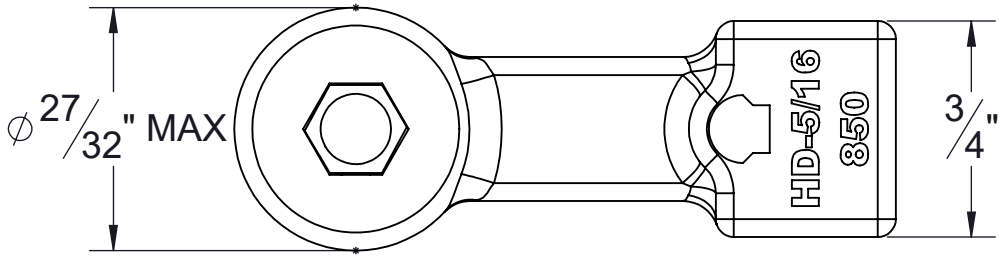

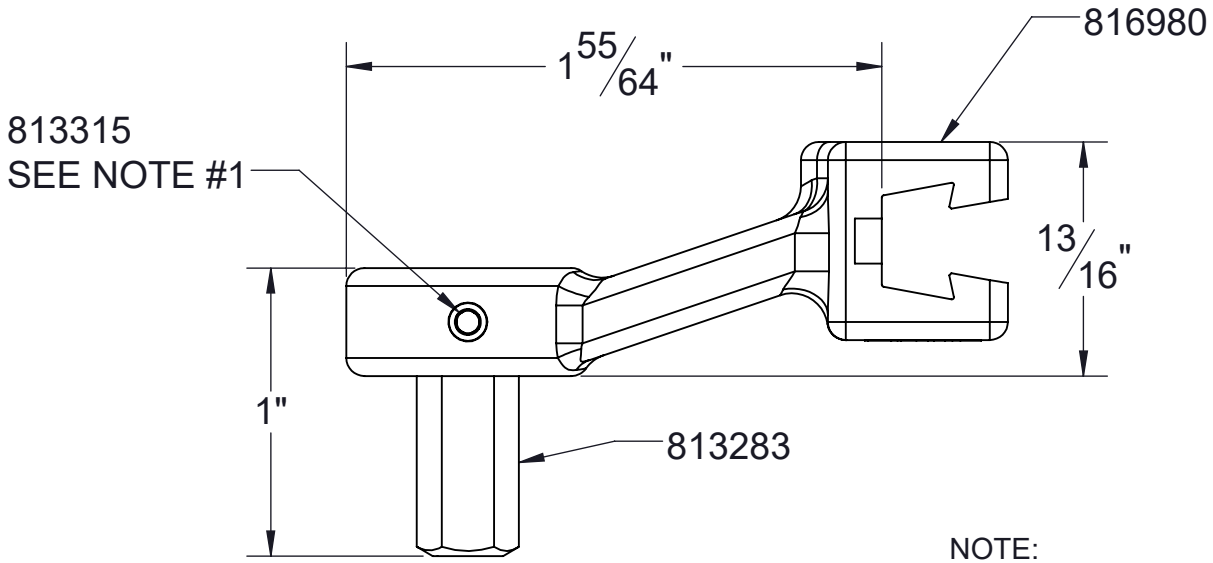

NOTE:

1. APPLY LOC-TITE GRADE 222 OR EQUIV. TO SET SCREW PRIOR TO ASSEMBLY (TORQUE TO 8-12 INLBs).

STURTEVANT RICHMONT®
TORQUE MEASUREMENT SYSTEMS
DIVISION OF RYESON CORPORATION

THIS PRINT AND ALL INFORMATION APPEARING THEREON IS THE PROPERTY OF "*STURTEVANT RICHMONT*". NEITHER THE PRINT NOR THE INFORMATION THEREON MAY BE REPRODUCED OR USED IN ANY MANNER WHATSOEVER OR DIVULGED TO ANY OTHER PERSON UNLESS SPECIFICALLY AUTHORIZED BY "*STURTEVANT RICHMONT*".

DESCRIPTION

HEAD: HD-5/16: FINISHED

DIAGRAM No 819695-G

REV. G