INCLUDED but NOT SHOWN

ITEM NO.	PART NUMBER	DESCRIPTION	QTY.
1	SHEET 2-5	TORQTRONICS 2, SUB-ASSEMBLY, 150 FTLB	1
2	820095	PLASTIC BAG, 2-1/2 x 4	2
3	820030	LABEL, S/R INSPECTION & CALIBRATION	1
4	21555	POWER PLUG w/LOCKRING SUB ASSEMBLY	1
5	870777	ADAPTER 3/8 SQ. DR. FEMALE TO 1/2" SQ. MALE	1
6	21175	DTW RS-232 CABLE, 6', UNMOLDED	1
7	868427	STATIC SHEET CUT TO SIZE 1-1/2" x 3-1/2"	1
8	21553	GROUND CORD, SNAP ON, 10 FEET	1
9	10456	USB-RS232 CONVERTER	1
10	857295	MEMORY STICK, 4 GB	1

PART NO. 10696-A

ITEM #	PART #	DESCRIPTION	QTY
12	21508	CARRYING CASE w/FOAM	1
15	820201	LABER, TORQ-TRONICS 2, PACKAGING (PLACE IN RECESSED AREA ON CARRYING CASE)	1
17	857292	MANUAL, INSTRUCTIONS	1

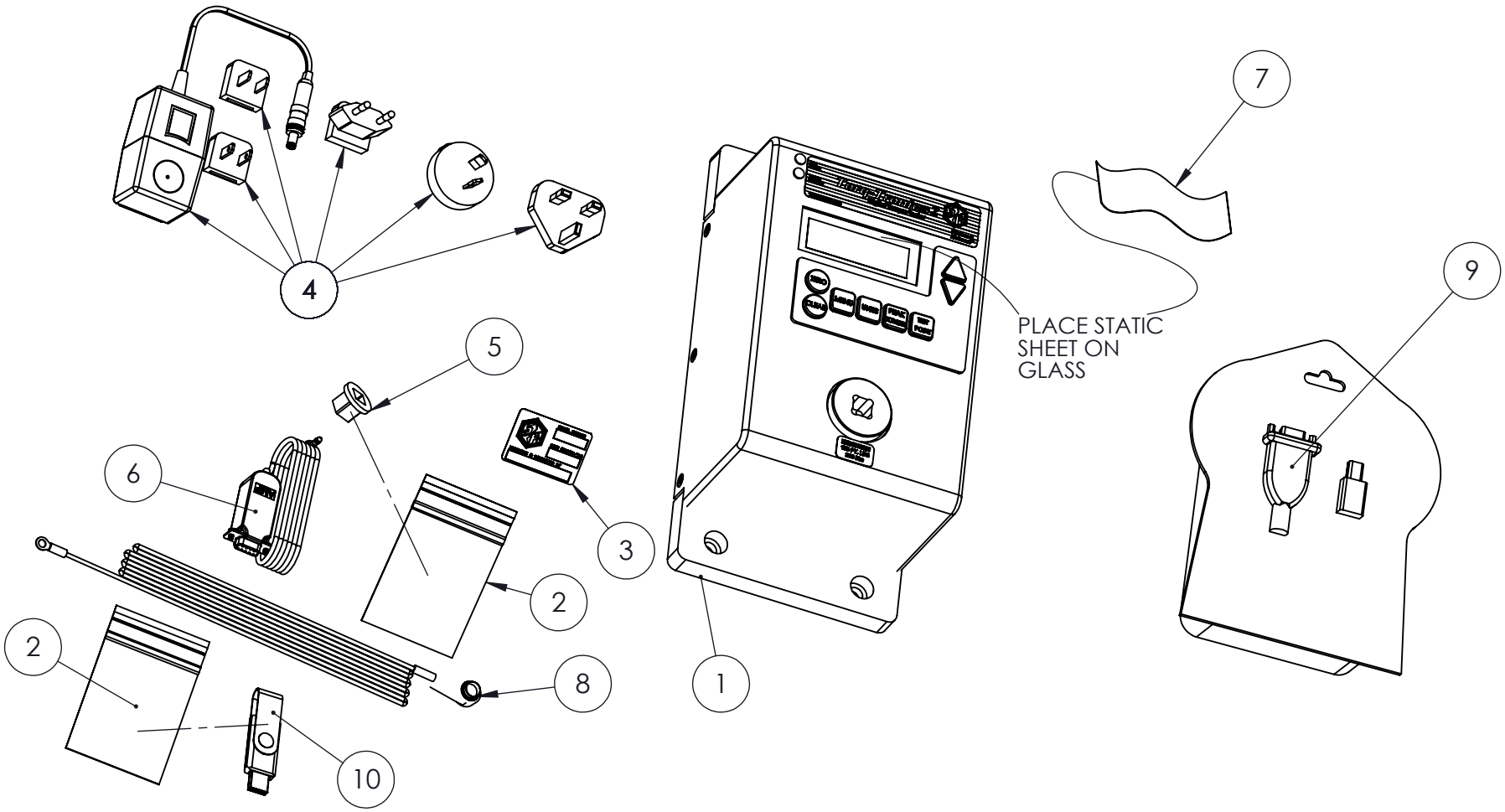

STURTEVANT RICHMONT®
TORQUE MEASUREMENT SYSTEMS
DIVISION OF RYESON CORPORATION

THIS PRINT AND ALL INFORMATION APPEARING THEREON IS THE PROPERTY OF "*STURTEVANT RICHMONT*". NEITHER THE PRINT NOR THE INFORMATION THEREON MAY BE REPRODUCED OR USED IN ANY MANNER WHATSOEVER ORDIVULGED TO ANY OTHER PERSON UNLESS SPECIFICALLY AUTHORIZED BY "*STURTEVANT RICHMONT*".

PARTS DIAGRAM
TORQTRONICS 2, 150 Sheet 1 of 5

DIAGRAM No AND REV.
10696-A