ITEM NO.	PART NO.	DESCRIPTION	QTY.
1	SHEET 3	TORQTRONICS 2, SUB-ASSEMBLY, 250 FTLB	1
2	820095	PLASTIC BAG, 2-1/2 x 4	2
3	820030	LABEL, S/R INSPECTION & CALIBRATION	1
4	21555	POWER PLUG w/LOCKRING SUB ASSEMBLY	1
5	870777	ADAPTER 3/8 SQ. DR. FEMALE TO 1/2" SQ. MALE	1
6	21175	DTW RS-232 CABLE, 6', UNMOLDED	1
7	868427	STATIC SHEET CUT TO SIZE 1-1/2" x 3-1/2"	1
8	870778	ADAPTER 1/2" SQ. DR. TO 3/4" SQ. DR.	1
9	21553	GROUND CORD, SNAP ON, 10 FEET	1
10	10456	USB-RS232 CONVERTER	1
11	857295	MEMORY STICK, 4 GB	1

INCLUDED but NOT SHOWN

ITEM #	PART #	DESCRIPTION	QTY
13	21508	CARRYING CASE w/FOAM	1
16	820201	LABEL, TORQ-TRONICS 2, PACKAGING (PLACE IN RECESSED AREA ON CARRYING CASE)	1
18	857292	MANUAL, INSTRUCTIONS	1

PART NO. 10697-A

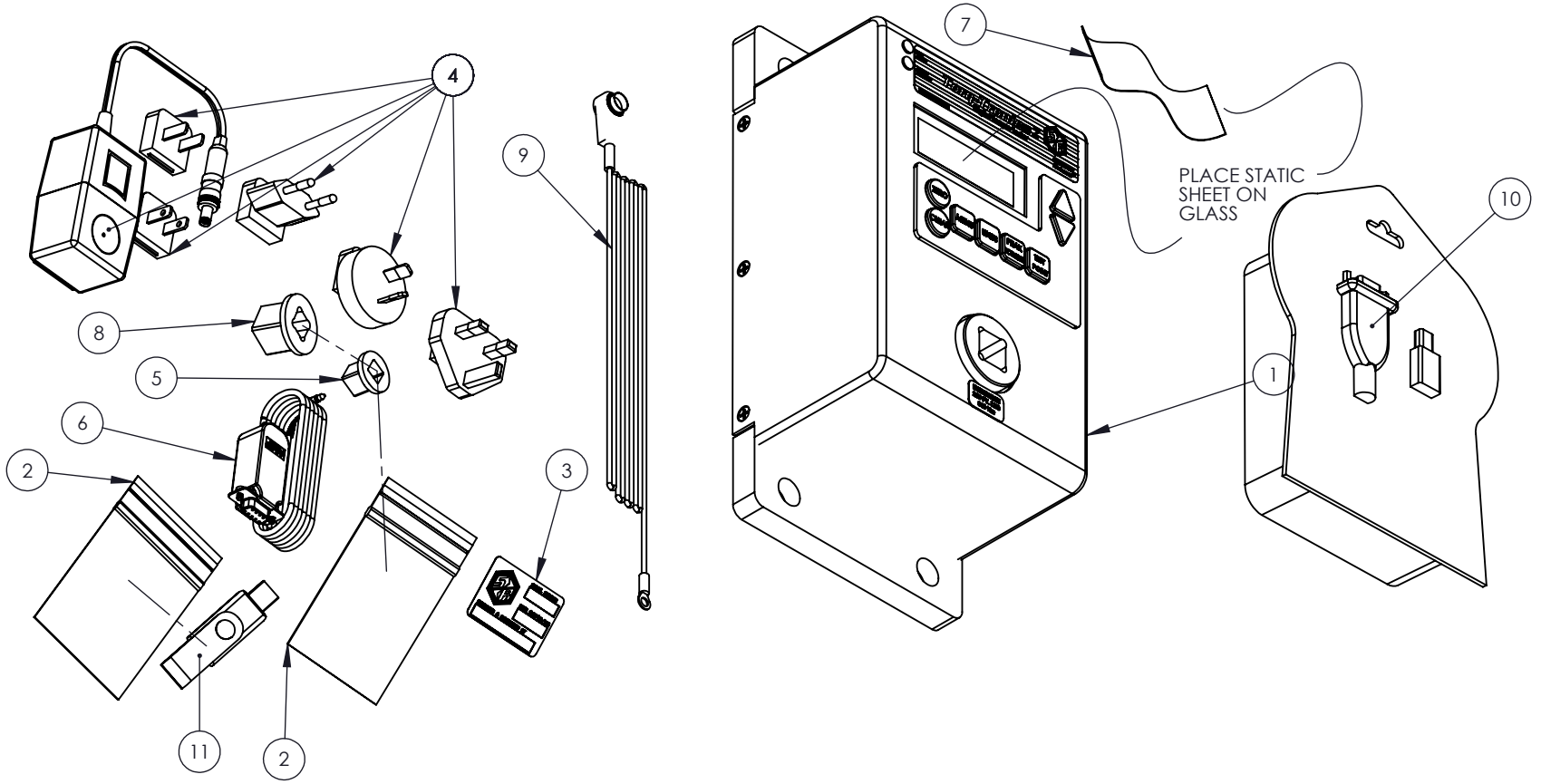

STURTEVANT RICHMONT®
TORQUE MEASUREMENT SYSTEMS
DIVISION OF RYESON CORPORATION

THIS PRINT AND ALL INFORMATION APPEARING THEREON IS THE PROPERTY OF "*STURTEVANT RICHMONT*". NEITHER THE PRINT NOR THE INFORMATION THEREON MAY BE REPRODUCED OR USED IN ANY MANNER WHATSOEVER ORDIVULGED TO ANY OTHER PERSON UNLESS SPECIFICALLY AUTHORIZED BY "*STURTEVANT RICHMONT*".

PARTS DIAGRAM

TORQTRONICS 2, 250 Sheet 1 of 5

DIAGRAM No AND REV.

10697-A