ITEM NO.	PART NO.	DESCRIPTION	PART #
1	SHEET 2-5	TORQ-TRONICS 2, SUB-ASSEMBLY, 600 FTLB	1
2	820095	PLASTIC BAG, 2-1/2 x 4	2
3	820030	LABEL, S/R INSPECTION & CALIBRATION	1
4	21555	POWER PLUG w/LOCKRING SUB ASSEMBLY	1
5	870777	ADAPTER 3/8 SQ. DR. FEMALE TO 1/2" SQ. MALE	1
6	21175	DTW RS-232 CABLE, 6', UNMOLDED	1
7	868427	STATIC SHEET CUT TO SIZE 1-1/2" x 3-1/2"	1
8	870778	ADAPTER 1/2" SQ. DR. TO 3/4" SQ. DR.	1
9	21553	GROUND CORD, SNAP ON, 10 FEET	1
10	10456	USB-RS232 CONVERTER	1
11	857295	MEMORY STICK, 4 GB	1

PART NO. 10698-B

INCLUDED but NOT SHOWN

ITEM #	PART #	DESCRIPTION	QTY
13	21508	CARRYING CASE w/FOAM	1
16	863049	SR LOGO LABEL 1 3/4" x 4 3/4" (PLACE IN RECESSED AREA ON CARRYING CASE)	1
18	857292	MANUAL, INSTRUCTION	1

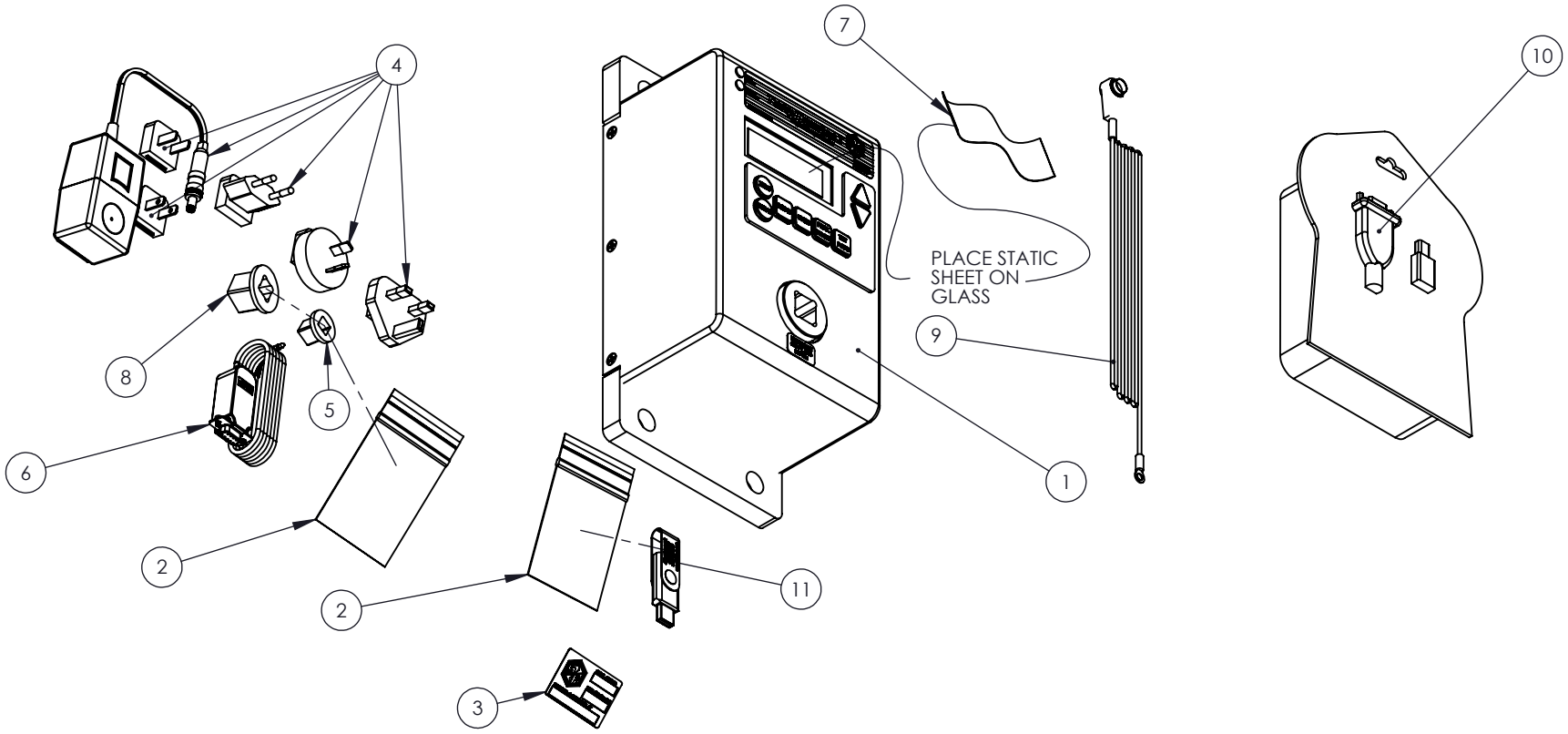

STURTEVANT RICHMONT®
TORQUE MEASUREMENT SYSTEMS
DIVISION OF RYESON CORPORATION

THIS PRINT AND ALL INFORMATION APPEARING THEREON IS THE PROPERTY OF "STURTEVANT RICHMONT". NEITHER THE PRINT NOR THE INFORMATION THEREON MAY BE REPRODUCED OR USED IN ANY MANNER WHATSOEVER OR DIVULGED TO ANY OTHER PERSON UNLESS SPECIFICALLY AUTHORIZED BY "STURTEVANT RICHMONT".

DESCRIPTION: TORQTRONICS 2, 600 SHEET 1 OF 5

DIAGRAM No: 10698-B

REV.: B