ITEM NO.	PART NUMBER	DESCRIPTION	QTY.
1	SEE SHEET 2	TT SERIES TRANSDUCER ASSEMBLY, 150ftlb	1
2	814706	KEYWAY, 3/16" x 3/16" x 1"	1
3	820030	LABEL, S/R INSPECTION & CALIBRATION	1
4	30173	SCREW 1/4-28 x 3/4 LONG, BLACK	2
5	890404	SCREW, CAP, SOC., 3/8-24 x 3/4"	4
6	814034	BASE, STEEL, LARGE, TT SERIES	1

PART NO. 10290-

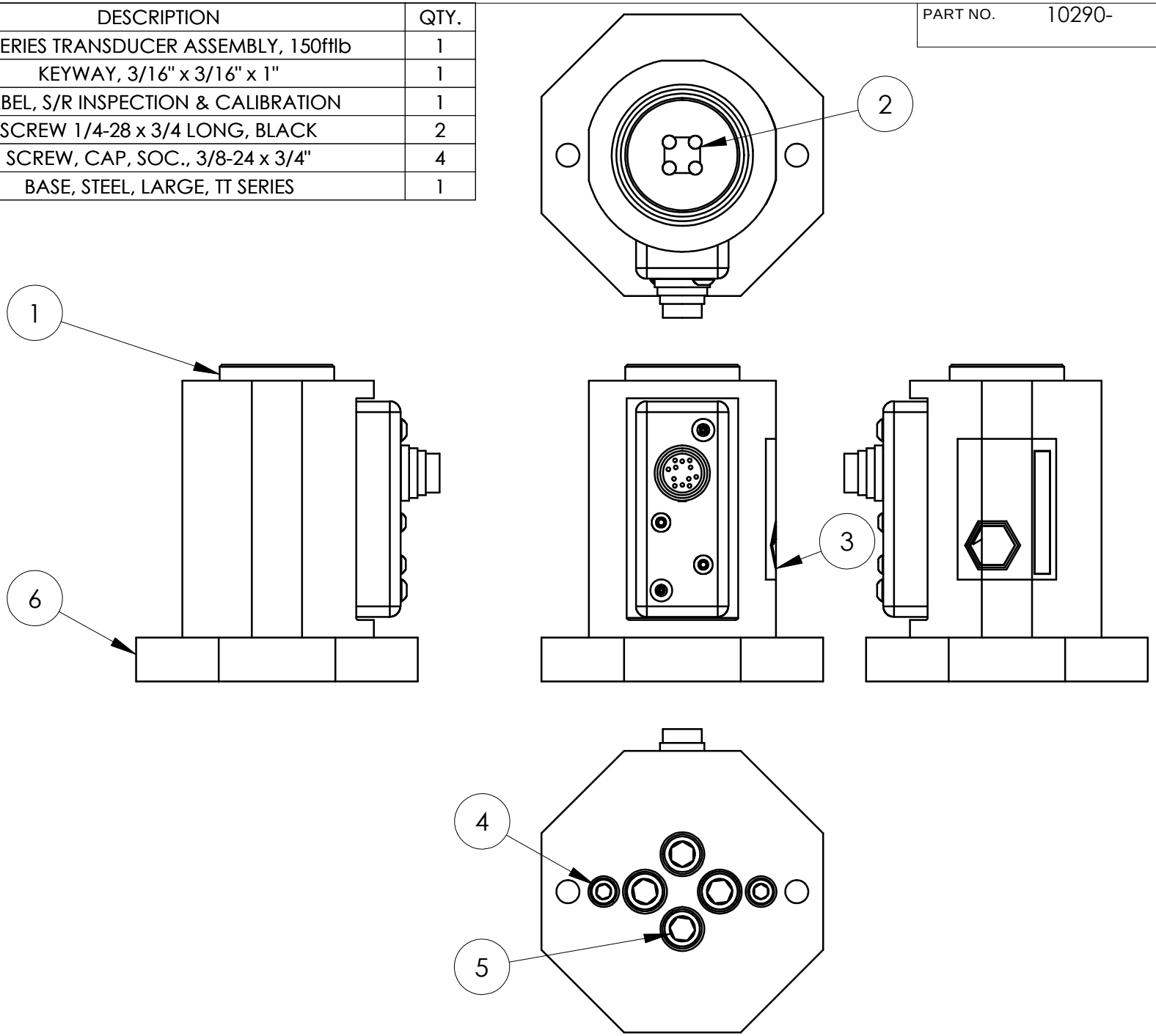

SHEET 1 OF 2

THIS PRINT AND ALL INFORMATION APPEARING THEREON IS THE PROPERTY OF "STURTEVANT RICHMONT". NEITHER THE PRINT NOR THE INFORMATION THEREON MAY BE REPRODUCED OR USED IN ANY MANNER WHATSOEVER OR DIVULGED TO ANY OTHER PERSON UNLESS SPECIFICALLY AUTHORIZED BY "STURTEVANT RICHMONT".

DESCRIPTION	DIAGRAM No	REV.
CALIBRATION, TT W/ BASE, 150	10290	-

PART NO. 10290-

BOM Table For 20155			
ITEM NO.	PART NUMBER	DESCRIPTION	QTY.
7	21482	TRANSDUCER FINAL RESISTOR SUB-ASSEMBLY 150 FT. LB.: DTC	1
8	813800	TT SERIES, LARGE TRANSDUCER HOUSING, MACHINED	1
9	813804	BOX, RECTANGULAR, TT SERIES, LARGE TRANSDUCER	1
10	30426	SPACER, SIZE 8 x 5/8 LENGTH, ROUND, UNTHREADED, NYLON	2
11	890172	SCREW, BUTTON, 8-32 x 3/4", SOC. CAP	2
12	891000	BEARING, 2" O.D., 1-5/8" I.D., 1/2" WIDE, TORQTRONICS	1
13	21190	CONNECTOR, MALE SOCKET, SOLDER, FRONT FASTENED	1
14	890174	SCREW, BUTTON, 6-32 x 3/8", SOC. CAP	2
15	30442	NUT, 6-32, STEEL	2

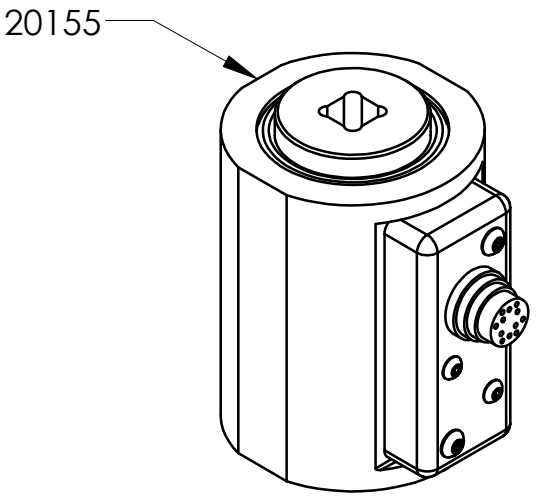

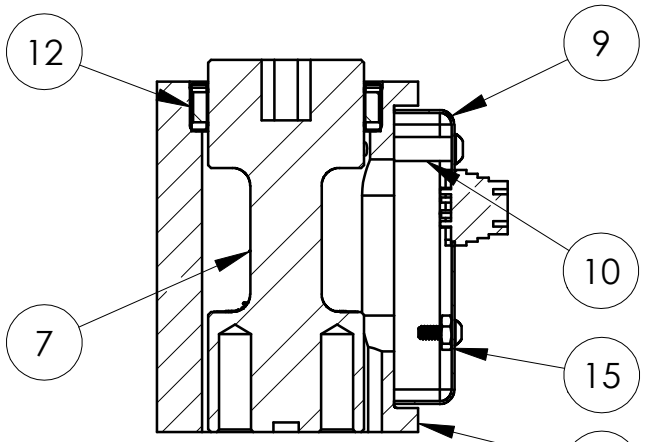

SECTION A-A

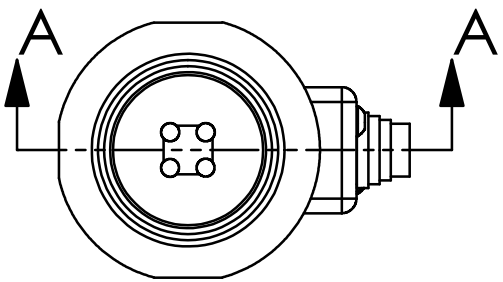

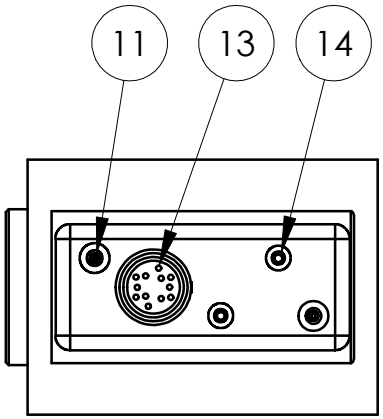

SHEET 2 OF 2

STURTEVANT RICHMONT®
TORQUE MEASUREMENT SYSTEMS
DIVISION OF RYESON CORPORATION

THIS PRINT AND ALL INFORMATION APPEARING THEREON IS THE PROPERTY OF "STURTEVANT RICHMONT". NEITHER THE PRINT NOR THE INFORMATION THEREON MAY BE REPRODUCED OR USED IN ANY MANNER WHATSOEVER OR DIVULGED TO ANY OTHER PERSON UNLESS SPECIFICALLY AUTHORIZED BY "STURTEVANT RICHMONT".

DESCRIPTION	DIAGRAM No	REV.
CALIBRATION, TT W/ BASE, 150	10290	-