ITEM	QTY	PART NO.	DESCRIPTION
5	1	10205	2000 MECHANICAL LOADER, SUB-ASSY
6	1	820137	LABEL

PART NO. 10168-F

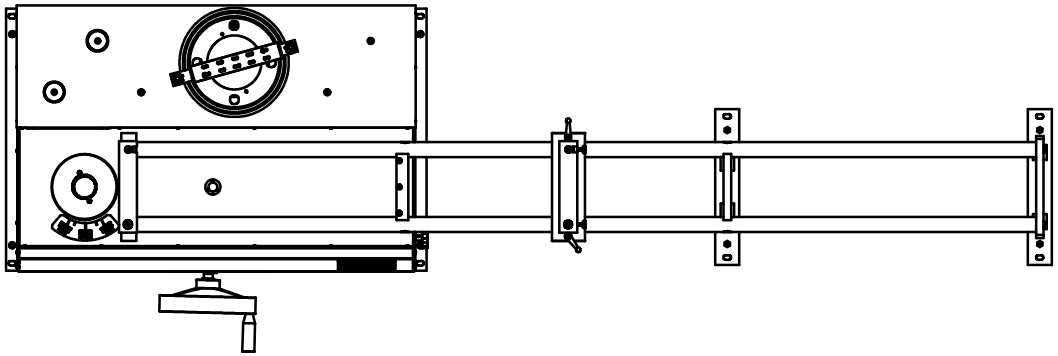

DETAIL OF LABEL

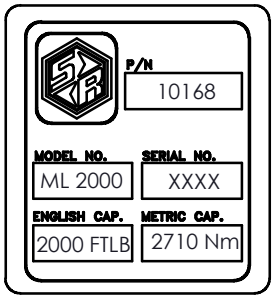

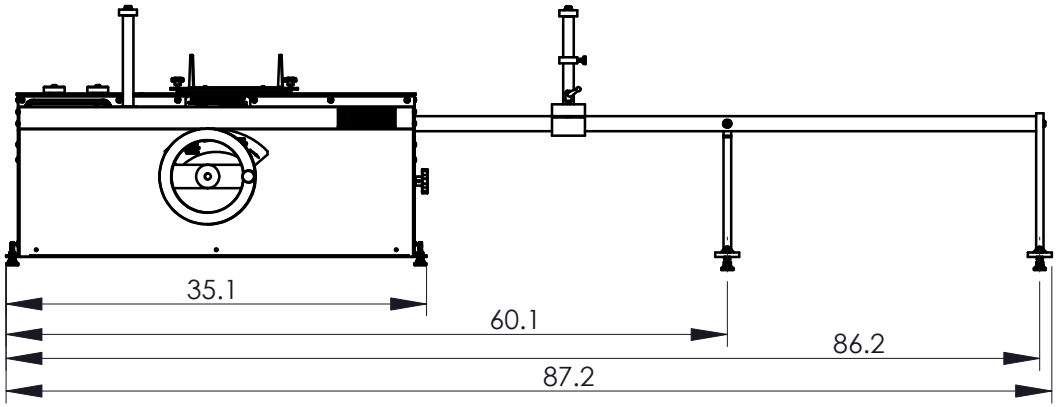

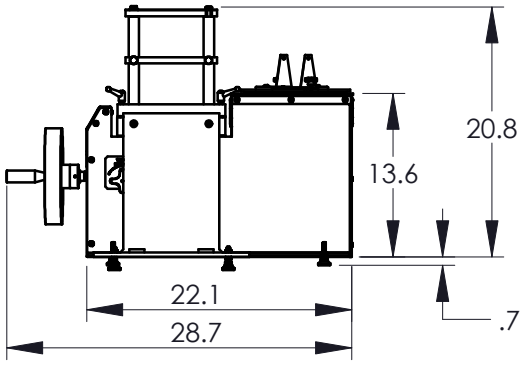

STURTEVANT RICHMONT®
TORQUE MEASUREMENT SYSTEMS
DIVISION OF RYESON CORPORATION

THIS PRINT AND ALL INFORMATION APPEARING THEREON IS THE PROPERTY OF "STURTEVANT RICHMONT". NEITHER THE PRINT NOR THE INFORMATION THEREON MAY BE REPRODUCED OR USED IN ANY MANNER WHATSOEVER ORDIVULGED TO ANY OTHER PERSON UNLESS SPECIFICALLY AUTHORIZED BY "STURTEVANT RICHMONT".

DESCRIPTION
2000 MECHANICAL LOADER

DIAGRAMM No
10168-F

REV.
F