ITEM	QTY	PART NO.	DESCRIPTION
5	1	10205	2000 MECHANICAL LOADER, SUB-ASSY
6	1	820137	LABEL

DETAIL OF
LABEL 820018

Sturtevant
Richmont
www.srtorque.com

P/N 10168

MODEL ML 2000

Serial Number XXXX

ENGLISH Capacity 2000 FTLB

Metric Capacity 2710Nm

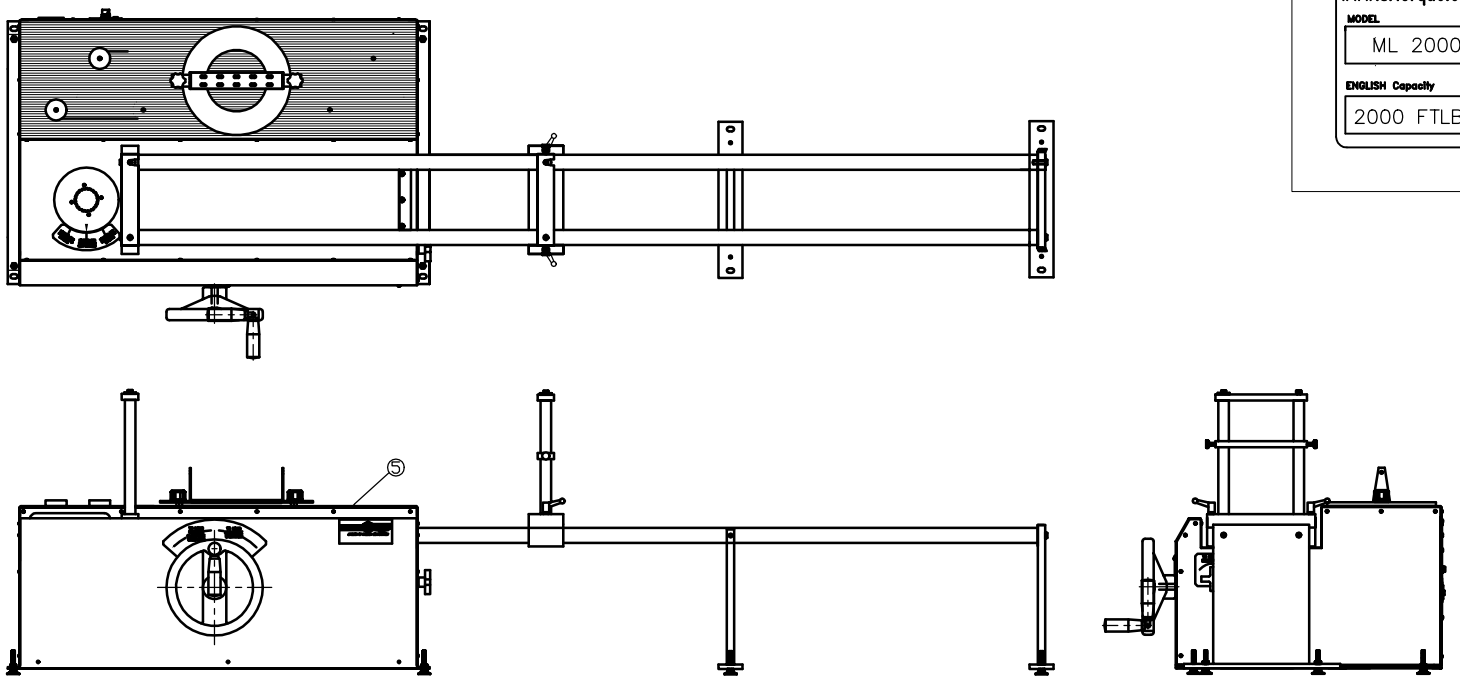

STURTEVANT RICHMONT®
TORQUE MEASUREMENT SYSTEMS
DIVISION OF RYESON CORPORATION

THIS PRINT AND ALL INFORMATION APPEARING THEREON IS THE PROPERTY OF "STURTEVANT/RICHMONT". NEITHER THE PRINT NOR THE INFORMATION THEREON MAY BE REPRODUCED OR USED IN ANY MANNER WHATSOEVER OR DIVULGED TO ANY OTHER PERSON UNLESS SPECIFICALLY AUTHORIZED BY "STURTEVANT/RICHMONT".

PART DESCRIPTION
2000 MECHANICAL LOADER

DIAGRAM NO. & REV.
10168-E