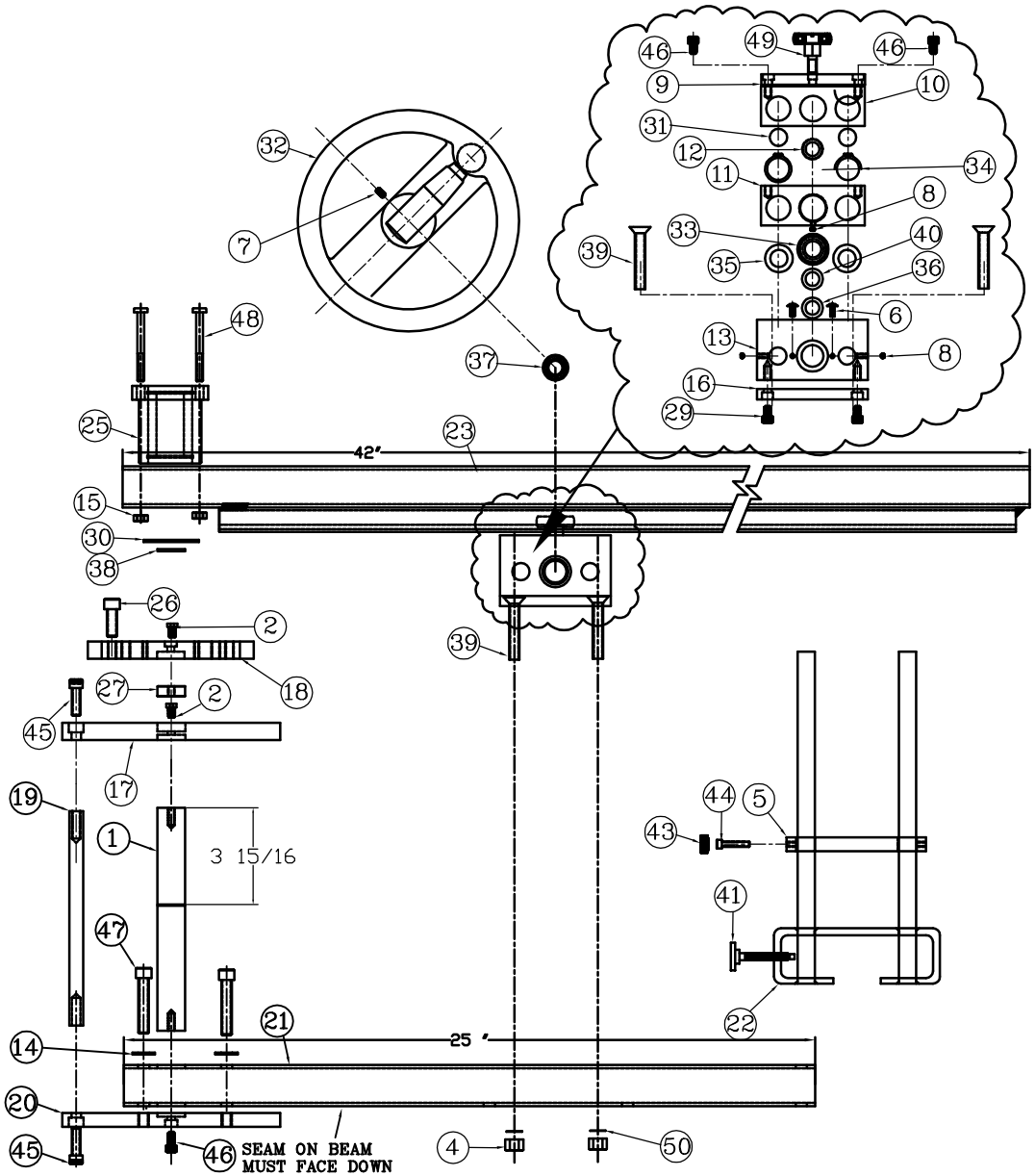

MULTIPAK	MULTIPAK QTY	ITEM	QTY.	PART.#	TORQUE. REQ'D	DESCRIPTION
		1	1	813365		SHAFT
* 816005	10	2	2	890551		SCREW,1/4–20 x 3/8, LOW HEAD
		3	2	890929		BUSHING, 3/8 OD
816027	10	4	4	813562		NUT, 3/8–16, HEX
		5	1	813344		SUPPORT, WRENCH
816046	10	6	4	890202		SCREW, TRUSS, 8–32 x 3/8, PHILLIPS
816047	10	7	1	890220	13–18 INLB	SCREW, SET, 10–32 x 3/8, CUP POINT
816048	10	8	3	890101		SCREW, SET, 8–32 x 1/8, CUP POINT
		9	1	813340		PLATE, TRAVEL
		10	1	813339		PLATE, TRAVEL, REAR
		11	1	813338		PLATE TRAVEL, FRONT
		12	1	813337		ROD, THREADED, ACME
		13	2	813336		PLATE, SIDE, LOADER
816049	10	14	4	890441		WASHER, 3/8, 1/16 THK, STL
816050	10	15	4	890540		NUT, NYLON INSERT, 1/4–20, HEX
		16	1	813325		PLATE, LOADER
		17	1	813324		PLATE, TOP
		18	1	814129		PLATE, SWIVEL, 600 FTLB ONLY
		19	1	813298		PLATE, SIDE
		20	1	813297		PLATE, BOTTOM
		21	1	813296		BEAM, BOTTOM
		22	1	811102		ASSEMBLY, SLIDE
		23	1	811426		600 ML, WELDMENT, BEAM
* 816314	6	24	6	890237		SCREW, 3/8–16 x 1 1/4 SOCKET CAP
		25	1	890917		BEARING, FLANGE MOUNT
816051	10	26	2	890412		SCREW, 3/8–16 x 1", SOC CAP
		27	1	813376		PIVOT, SWIVEL PLATE
		28	1	813366		SPACER
816052	10	29	4	30164		SCREW, 1/4–20 x 3/4, SOC CAP
		30	1	890903		BUSHING, 1 ID, 2 OD, 3/64 THK
		31	2	890932		ROD, 5/8 S.S.
		32	1	813368		HANDWHEEL, FOLDING, 8" DIA
		33	1	890909		ACME ROUND NUT
816005	10	34	4	890905		RETAINER RING 7/8 SHAFT
		35	4	813372		BEARING SLEEVE, 5/8 ROD
		36	2	890902		BEARING, 1/2 ID
		37	1	890904		BEARING, THRUST
816053	10	38	1	890919		RETAINER RING, 1" ROD
816054	10	39	4	890430		SCREW, FLAT HD, HEX SOC, 3/8–16 x 2 1/4
816055	10	40	1	890459		WASHER, 1/2 SIZE, .51 ID, 1" OD, 1/16 THK, OILLITE BRONZE
816056	10	41	2	890521		THUMBSCREW KNURLED HEAD
		43	4	20614		KNOB, KNURLED
* 816057	10	44	10	890210		SCREW, 10–32 x 3/4, SOC HD
* 816058	10	45	14	30257		SCREW, 5/16–18 x 1" HEX SOC CAP
816059	10	46	5	890511		SCREW, 1/4–20 x 1/2, SOC CAP
816060	10	47	4	890411		SCREW, 3/8–16 x 2, SOC CAP
816061	10	48	4	890505		SCREW, 1/4–20 x 2 1/2, PAN HD, S.S.
		49	2	890922		BEARING, ROLLER
816062	10	50	4	890447		WASHER, 3/8, EXTERNAL TOOTH
		51	1	813941		PYLON, SUPPORT, 250 M.L.
816749	10	52	1	30172		SCREW, 1/4–28 x 1/2 SOC CAP HEAD

* DENOTES HARDWARE USED FOR MOUNTING TRANSDUCERS

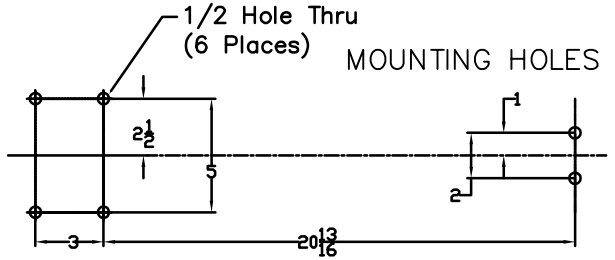

STURTEVANT RICHMONT®
TORQUE MEASUREMENT SYSTEMS
DIVISION OF RYESON CORPORATION

THIS PRINT AND ALL INFORMATION APPEARING THEREON IS THE PROPERTY OF "STURTEVANT/RICHMONT". NEITHER THE PRINT NOR THE INFORMATION THEREON MAY BE REPRODUCED OR USED IN ANY MANNER WHATSOEVER OR DIVULGED TO ANY OTHER PERSON UNLESS SPECIFICALLY AUTHORIZED BY "STURTEVANT/RICHMONT".

PART DESCRIPTION

600 FTLB M.L.

DIAGRAM NO. & REV.

10431—D