Item#	Part Code	Description
1	BH8AC3600-01	WHEEL DOLLY REAR WHEEL-3.5’
2	BH8AC3600-02	WHEEL DOLLY FRONT WHEEL-COMPLETE
3	BH8AC3600-03	WHEEL DOLLY PUMP UNIT
4	BH8AC3600-04	WHEEL DOLLY REAR WHEEL-3’
5	BH8AC3600-05	WHEEL DOLLY SCREW ROD
6	BH8AC3600-06	WHEEL DOLLY ROTATING HANDLE
7	BH8AC3600-07	WHEEL DOLLY KNOB

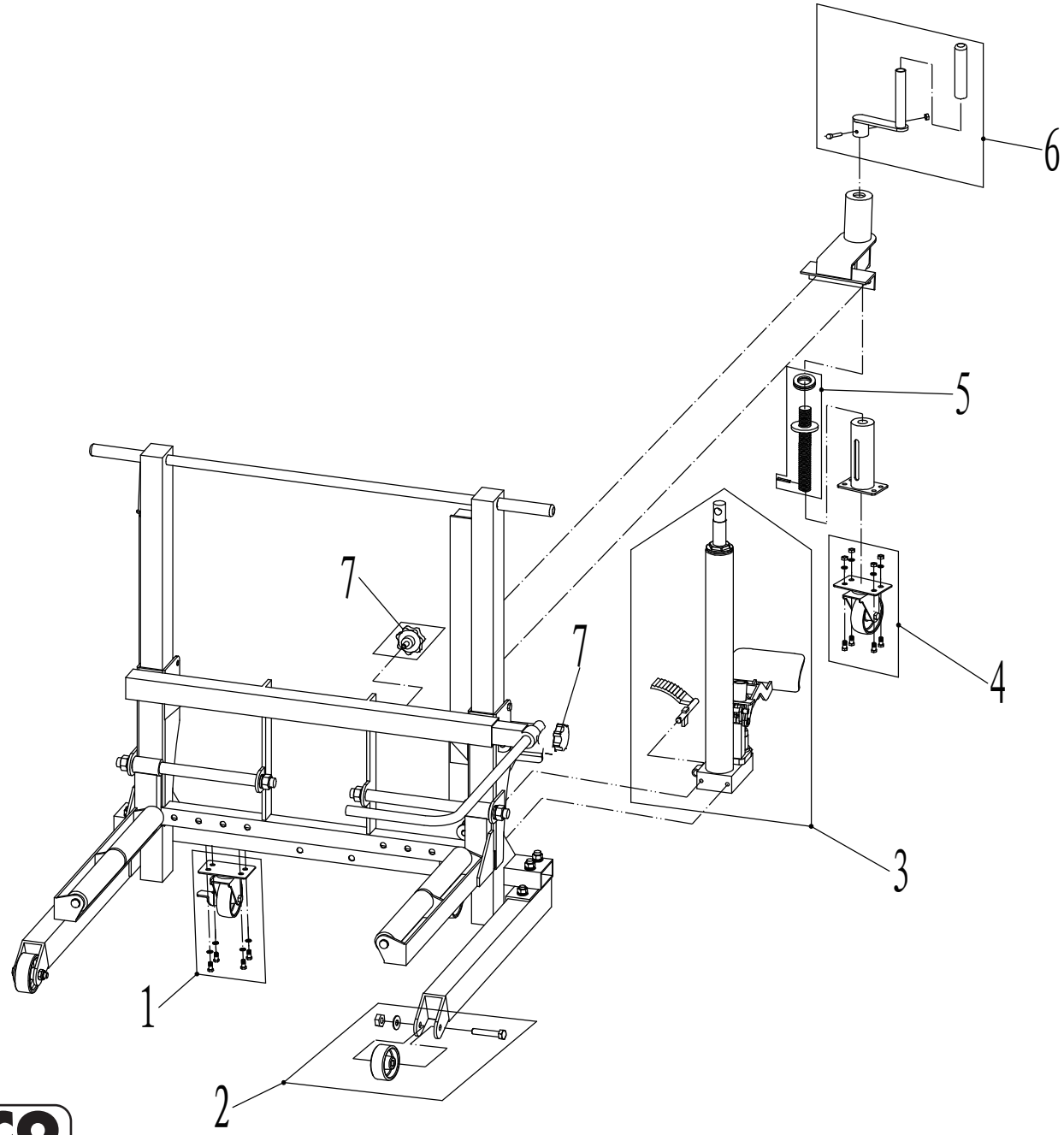

BH8AC3-600

BAHCO

WWW.SNAEUROPE.COM