PART NO. 810712-E

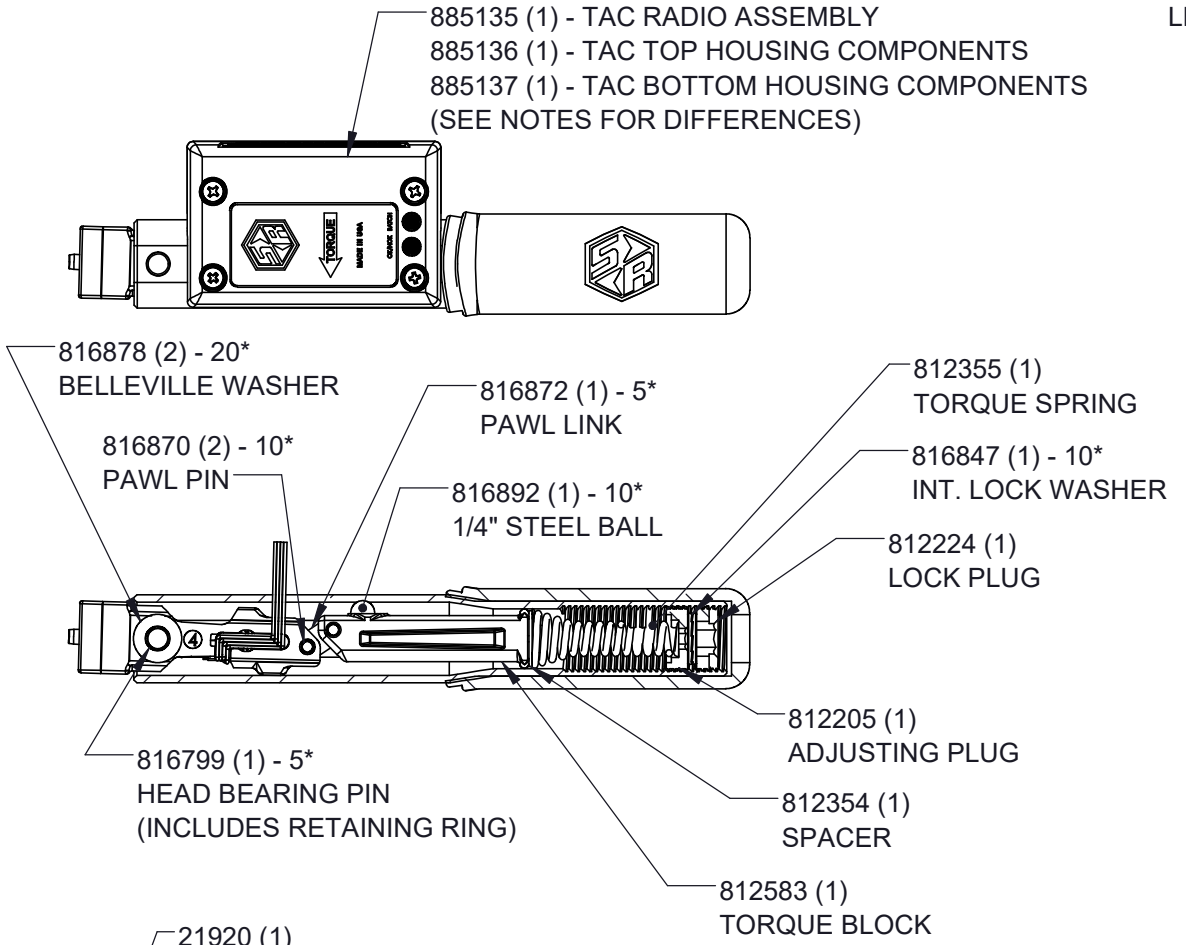


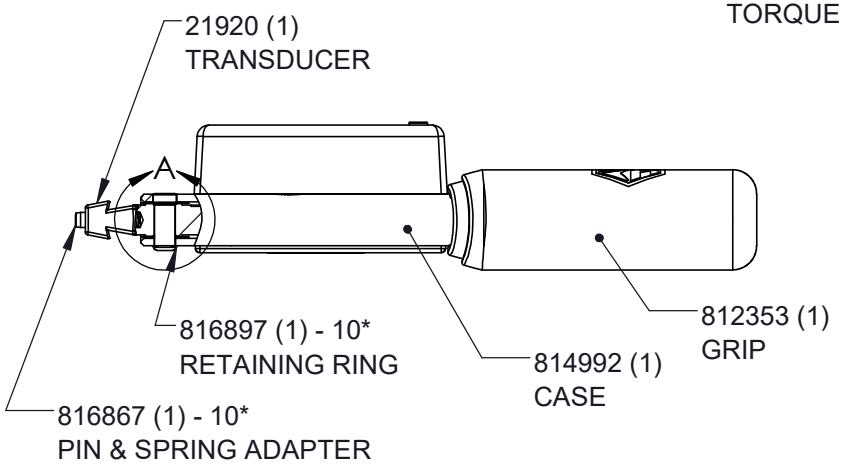


LEGEND: () = QUANTITY/TOOL
* = QUANTITY/MULTI-PAK

21970 - BATTERY AAA (2)
857500 - CARTON
857470 - INSTRUCTIONS

885135 - RADIO KIT INCLUDES TOP AND BOTTOM HOUSINGS, TAC PCBA, PCB INSULATION, 2.4 GHz RADIO, RADIO CABLE, RADIO COVER, LITEPIPES (2), LITEPIPE RETAINERS (2), RUBBER WASHERS (4), 4-40X5/8" MACHINE SCREWS (2), 4-40X1" SHEET METAL SCREWS (2), TAC LABEL, FCC LABEL, & NIMH LABEL.

885136 - TOP HOUSING ASSEMBLY INCLUDES LITEPIPES (2), LITEPIPE RETAINERS (2), RUBBER WASHERS (4), 4-40X5/8" MACHINE SCREWS (2), 4-40X1" SHEET METAL SCREWS (2), TAC LABEL, & FCC LABEL.

885137 - BOTTOM HOUSING ASSEMBLY INCLUDES BOTTOM HOUSING ASSY, COVER, AND NIMH LABEL.

**WARNING:** USE ONLY 1.2 VDC NiMH AAA RECHARGEABLE BATTERIES. OTHER BATTERIES CAN CAUSE DAMAGE TO THE BOARD AND IMPACT RADIO SIGNAL.

816799 - THIS PIN IS FORMED OVER **CUSTOMER MUST** GRIND OFF FORMED END & INSTALL THIS PIN FORMING THE HEAD OVER THE RETAINING RING AS SHOWN.

DETAIL A
SCALE 1 : 1

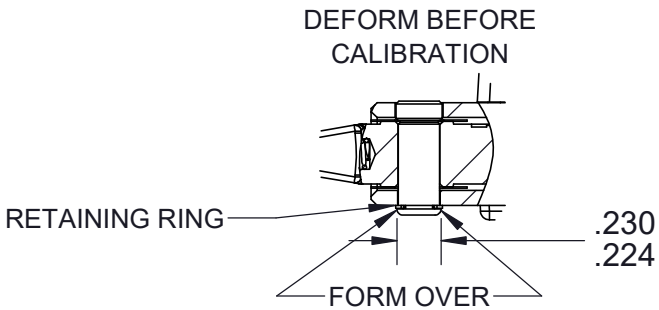


3/24/2025

STURTEVANT RICHMONT®
TORQUE MEASUREMENT SYSTEMS
DIVISION OF RYESON CORPORATION

THIS PRINT AND ALL INFORMATION APPEARING THEREON IS THE PROPERTY OF "STURTEVANT RICHMONT". NEITHER THE PRINT NOR THE INFORMATION THEREON MAY BE REPRODUCED OR USED IN ANY MANNER WHATSOEVER OR DIVULGED TO ANY OTHER PERSON UNLESS SPECIFICALLY AUTHORIZED BY "STURTEVANT RICHMONT".

| DESCRIPTION | DIAGRAM No | REV. |
|---|---|---|
| TAC-150I | 810712-E | E |